BERNINA 830

made to create BERNINA

LOOKING FOR A NEW SEWING PROJECT?

You can find what you want in “inspiration”, our sewing magazine. Thanks to great sewing patterns and detailed sewing instructions, every project succeeds right away.

Inspiration magazine is available in German, English, French and Dutch

WITH AN ANNUAL SUBSCRIPTION* YOU GET THE MAGAZINE SENT DIRECTLY TO YOUR DOOR THREE TIMES A YEAR.

bernina.com/inspiration

* Not available in all countries.

Dear BERNINA 830 customer,

Congratulations! With the purchase of the BERNINA 830, you have acquired the ultimate sewing and embroidery system available in today's market. By purchasing this system, you have established that you are a creative person who is looking for the opportunity to explore and expand the unlimited world of creativity.

The use of modern, future-oriented technologies in the computerized sewing and embroidery field coupled with the tradition of BERNINA quality and reliability offer you the best of the future and the best of the past. With the BERNINA 830 system you will be able to sew faster, smarter, longer, and more creatively- and with more enjoyment. We have put all the dreams that our customers have shared with us into this product.

BERNINA wants you to fully enjoy the enormous possibilities that the BERNINA 830 sewing system offers you. To do so, you must learn all the wonderful features of the product. Therefore, don't hesitate to frequent your local BERNINA dealer and tap into the knowledge of the BERNINA educators.

I wish you much happiness and great satisfaction while enjoying your creative pastime.

H.P. Ueltschi
President
BERNINA International AG
CH-8266 Steckborn
www.bernina.com

IMPORTANT SAFETY INSTRUCTIONS

When using an electrical appliance, basic safety precautions should always be followed, including the following:

Read all instructions before using this sewing-/embroidery computer.

When the sewing-/embroidery computer is not in use, it should be disconnected from the electricity supply by removing the plug from the outlet.

DANGER!

To reduce the risk of electrical shock:

1 An appliance should never be left unattended when plugged in.
2 Always unplug this sewing-/embroidery computer from the electrical outlet immediately after using and before cleaning.
3 LED Radiation – Do not view directly with optical instruments. Class 1M LED product.

WARNING!

To reduce the risk of burns, fire, electric shock or injury to persons:

1 Use this sewing-/embroidery computer only for its intended use as outlined in this manual. Use only attachments, accessories and parts recommended by the manufacturer.
2 Do not use the sewing-/embroidery computer as a toy. Caution is advised when the sewing-/embroidery computer is used by children, or near children. The sewing-/embroidery computer is not intended for use by persons (including children) with reduced physical, sensory or mental capabilities or lack of experience and knowledge, unless they have been given supervision or instruction concerning use of the sewing -/embroidery computer by a person responsible for their safety. To ensure children do not play with the sewing-/embroidery computer they must be supervised.
3 Never operate this sewing-/embroidery computer if:
- the cord or plug are damaged
- it is not working properly
- it has been dropped or damaged
- it has fallen into water

Return the sewing-/embroidery computer to your local authorized BERNINA dealer for examination or repair.
4 Never operate the sewing-/embroidery computer with any air openings blocked. Keep ventilation openings of the sewing-/embroidery computer and foot controller free from the accumulation of lint, dust and loose cloth.
5 Keep fingers away from all moving parts. Special care is required around the sewing needle.
6 Never drop or insert any objects into any openings on the sewing-/embroidery computer.
7 Do not use the sewing-/embroidery computer outdoors.
8 Do not operate the sewing-/embroidery computer where aerosol products (sprays) or oxygen are being used or where oxygen is being administered.
9 Do not pull or push fabric while stitching - this may cause the needle to break.
10 Do not use bent needles.
11 Always use a proper BERNINA stitch plate. The wrong plate can cause needle breakage.
12 To disconnect, turn all controls to the OFF («0») position, then remove the plug from the outlet. To unplug, pull the plug not the cord.
13 Turn all controls OFF (to the «0» position) when making any adjustments in the needle area - such as changing or threading the needle, presser foot etc.
14 Always unplug the sewing-/embroidery computer from the electrical outlet when removing covers, lubricating, or when making other user servicing adjustments mentioned in this instruction manual.
15 This sewing-/embroidery computer is provided with double insulation (except USA and Canada). Use only identical replacement parts. See instructions for servicing of double-insulated products.

SERVICING DOUBLE INSULATED PRODUCTS

In a double-insulated product two systems of insulation are provided instead of grounding. No grounding means is provided on a doubleinsulated product, nor should a means for grounding be added to the product. Servicing a doubleinsulated product requires extreme care and knowledge of the system and should be done only by qualified service personnel. Replacement parts for a double-insulated product must be identical to those parts in the product. A double-insulated product is marked with the words «DOUBLE INSULATION» or «DOUBLE INSULATED».

The symbol ⧈ may also be marked on the product.

DISCLAIMER

No liability will be assumed for any possible damage which arises from misuse of this sewing-/embroidery computer.

This sewing-/embroidery computer is intended for household use only.

SAVE THESE INSTRUCTIONS!

Sewing

Accessory & Preparation

Functions & Settings

Main Stitch Categories

BERNINA World

Maintenance/Troubleshooting

Stitch & Motif Overview

Index

032299.53.04_1204_B830_EN

Very important!
Risk of damage!

Helpful tips!

Text
Gayle Hillert, Herbert Stolz, Joanna Wild

Sewing & Embroidering Projects
Colette Cogley, Jeanne Delpit, Susan Fears, Claudia Giesser,
Gayle Hillert, Nina McVeigh, Pia Welsch, Joanna Wild

Screen Design & Drawings
sculpt.ch, CH-Steckborn

Photographs
Sterling Rice Group, USA
Patrice Heilmann, CH-Winterthur

Manual Design & Concept
Erika Vollenweider-Czibulya

Typesetting, Layout, DTP
Susanne Ribi, Erika Vollenweider-Czibulya

Copyright
2008 BERNINA International AG, CH-Steckborn

All rights reserved
For technical and product improvement reasons, the sewing computer's features, parts and accessory are subject to unannounced changes and alterations at any time. The accessory included can differ from country to country.

Accessory & Preparation

Accessory 6

Your Delivery 6
- Sewing computer cover 6
- Accessory 6
- In plastic bag 6

Presser Feet 7

BERNINA Specialty presser feet 7

Accessory Box 8
- Free Standing 8
- Lay-out 9

Sewing Computer 10

Details 10

Preparation 12

Battery 12

Power Switch/Power Cable 12

Free-Hand-System (FHS) Presser Foot Lifter 12

Foot Control 13

LED Sewing Light 13

Pivotable Triple Spool Holder 14

Bobbin 14
- Winding the Bobbin 15
- Interrupting the winding process 15
- Removing/Inserting the Bobbin 16
- Threading Lower Thread 16

Slide-on Table 17

Thread Cutter 17

Threading the Upper Thread 18
- Double/Triple Needle 19

Thread-Guide-and-Lubricating Unit 20
- As a thread-guide eyelet (Fig. **1**) 20
- As a thread lubricator (Fig. **2**) 20
- Assembly 20

Radial Thread Guide 21
- Various Options of Application 21

Changing the Needle 22

Changing the Presser Foot 22

Stitch plates 23

Feed-Dog and Fabric Feed 23
- Sewing with the Height Compensation Tool 24
- Sewing Corners 24

Thread Tension 25
- Upper Thread Tension 25
- Lower Thread Tension 25
- Altering the Tension 25

Needles 26

Important facts about Thread and Needles 26
- Thread 26
- Needle, Thread and Fabric 26
- Needle/Thread 26

Guidelines 27

Overview 28

Your Delivery

Sewing computer cover

- protects from dust and dirt

Accessory

- foot control
- power cable
- warranty card
- FHS presser foot lifter (Free Hand System)
- slide-on table
- seam guide for slide-on table
- Instructional DVD
- sewing computer cover
- accessory box
- thread lubricater

In plastic bag

1 4 bobbins
2 adjustable guides
3 wire threader for threading cording for bobbin play
4 tweezers
5 2 nets
6 cording attachment
7 magnifying glass adapter
8 small screwdriver, gray
9 touch pen
10 seam ripper
11 lint brush
12 multifunction tool
13 manual threader
14 spool disc small
15 holder for king-size spools, cone holder
16 height compensating tool
17 needle pack 130/705H
18 lubricator
19 monitoring mirror
20 hook cleaning tool

Presser Feet

1C Reverse pattern foot

1D Reverse pattern foot

2A Overlock foot

3A Automatic buttonhole foot with slide

3C Buttonhole foot

4D Zipper foot

5 Blindstitch foot

18 Button sew-on foot

20C Open embroidery foot

40C Sideways motion foot

42 BSR foot

BERNINA Specialty presser feet

8 Jeans foot

50 Walking foot

It is recommended that BERNINA specialty presser feet be used for specific sewing tasks such as quilting, heirloom sewing, home decorating, tailoring etc.
All the presser feet are shown in the enclosed accessory catalog.
They are available at your BERNINA dealer.

Accessory Box

Free Standing

- on the back of the box, pull both extensions out until they click into place

Lay-out

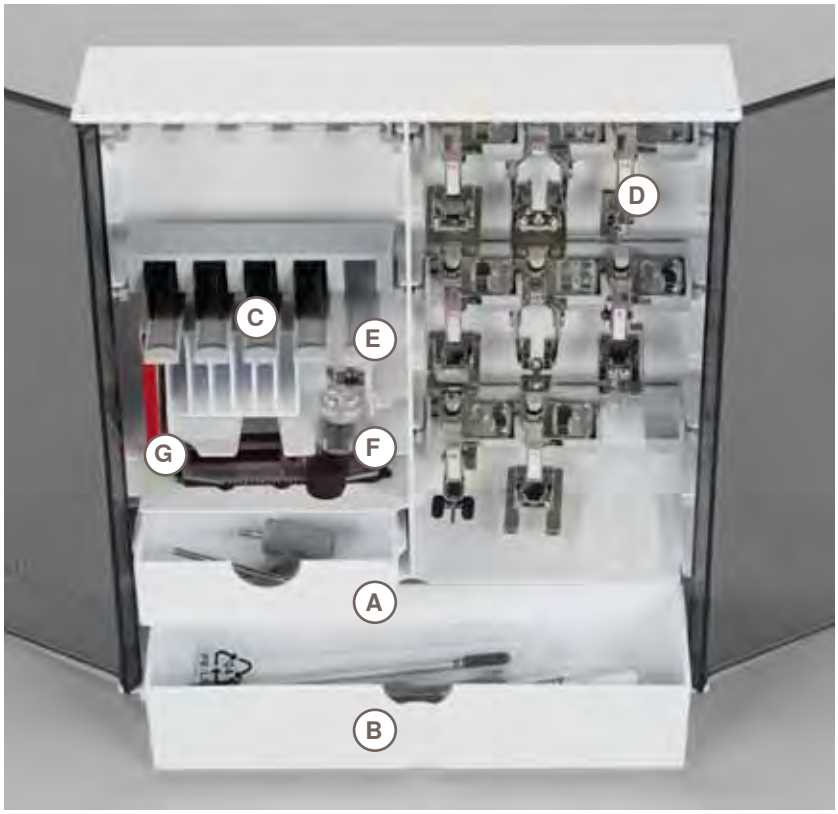

The box is equipped as standard with one small **A** and one large **B** drawer as well as a compartment for bobbin holders **C** and presser feet **D**.

- to remove a bobbin, press the compartment holder **E** lightly
- buttonhole foot with slide no. 3A can be stored in the left compartment **F**
- store the needle range supplied in the special compartment **G**

Details

B 830
BERNINA
1
2
3
4
5
6
7
8
9
10
11
12
13
14
15
16
17
18
19
20
21

22
23
24
25
26
27
28
29
30

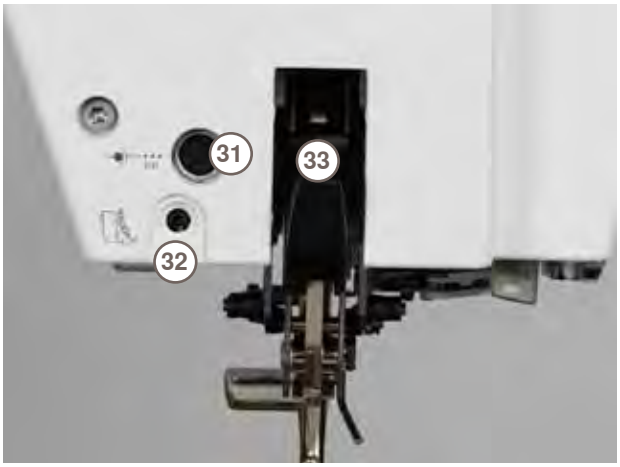
31
32
33

16
17
34
35
36
37
38
39

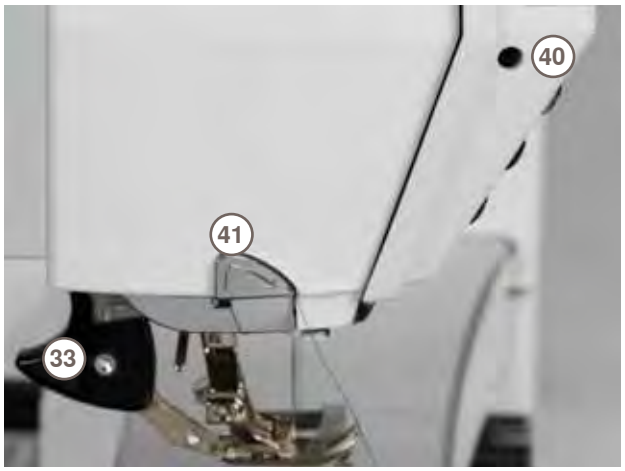

1 Bobbin cover
2 Stitch plate
3 Attachment base for special accessories
4 Presser foot
5 Needle clamp
6 Thread guide
7 Screen
8 Carrying handle
9 System Settings
- Setup button
- Tutorial button
- Creative Consultant button
- Help button
- Eco button
- Sewing-/Embroidery mode button
- «clr» clear button

10 Stitch width knob
11 Stitch length knob
12 Needle position buttons
13 Bobbin winder
14 Thread cutter for bobbin winder
15 Threading slit
16 Triple spool pin
17 Telescope
18 Bobbin pre-tension
19 Slide-on table socket
20 Darning hoop connection
21 FHS (Free Hand System) connection
22 Slide speed control
23 Automatic needle threader
24 Needle stop up/down button
25 Presser foot up/down button
26 Securing button
27 Pattern end button
28 Automatic thread cutter
29 Start/stop button
30 Quick reverse button
31 Special-accessories port
32 BSR connection
33 BERNINA Dual Feed
34 Handwheel
35 USB connection
36 PC connection
37 Foot control socket
38 Power switch on/off («I», «0»)
39 Power plug socket
40 Connection for Magnifying glass (optional accessory)
41 Thread cutter on head frame
42 Embroidery module connection

Battery

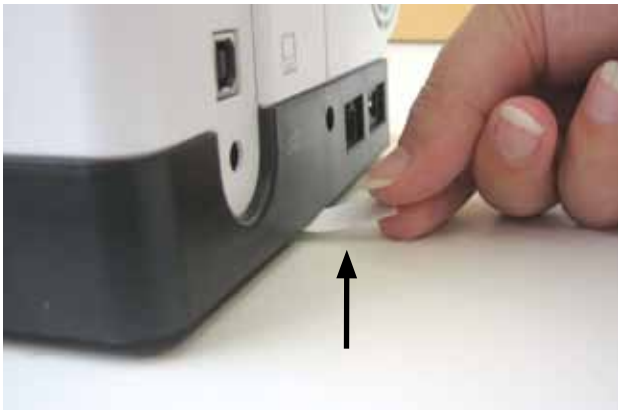

Please remove the protective sticker of the battery before taking the sewing computer in use.

Power Switch/Power Cable

A Power Switch
The sewing computer is switched on («I») and off («0») with the power switch.

I the sewing computer is switched on
0 the sewing computer is switched off

B Power connection
C Foot control connection
D PC connection
E USB stick connection

If the sewing computer is kept in a cold room, place it in a warm room for 1 hour before use.

(USA/Canada only):
The sewing computer has a polarized plug (one blade wider than the other). To reduce the risk of electrical shock, this plug is intended to fit in a polarized outlet only one way. If the plug does not fit fully in the outlet, reverse the plug. If it still does not fit, contact a qualified electrician to install the proper outlet. Do not modify the plug in any way!

Free-Hand-System (FHS) Presser Foot Lifter

The FHS is used to raise and lower the Presser Foot.

Attaching the Free Hand System

- insert into the opening; you should be able to operate the FHS with your knee in your normal sitting position

Raising and Lowering the Presser Foot

- with knee push FHS to the right
- the presser foot is raised and the feed-dog is lowered simultaneously. Tension is released
- the feed-dog is raised as soon as the first stitch is sewn

Your dealer can adjust the FHS if necessary.

Foot Control

Sewing Speed

- sewing speed is controlled by pressure on the foot control

Raise or Lower the Needle

- entire foot rests comfortably on Foot Pedal
- tap the Foot Control with your heel to raise or lower the needle

Cable tidy

- wind the cable around the reel
- insert the cable end (plug) into **A**

When sewing

- unwind the cable to the desired length and slip into **B** or **C**

(USA/Canada only):
Use only foot controller type LV1 or WFC1 with sewing computer model 830.

LED Sewing Light

The LED sewing light illuminates the sewing area with no shadows and has a very long service life.

A defective sewing light must only be replaced by a technician.

Take the sewing-/embroidery computer to your BERNINA dealer.

Pivotable Triple Spool Holder

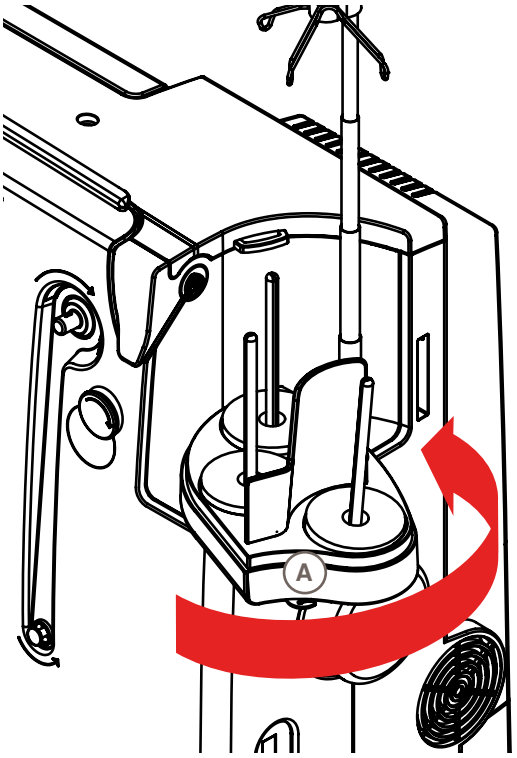

- remove spool-pin cover vertically upwards
- pull out the telescopic rod and ensure that all the parts snap into place
- swing spool pin to the right until it is engaged. This ensures a good overall view and access to the spool pins
- eyelet **A** is used when winding a bobbin

Bobbin

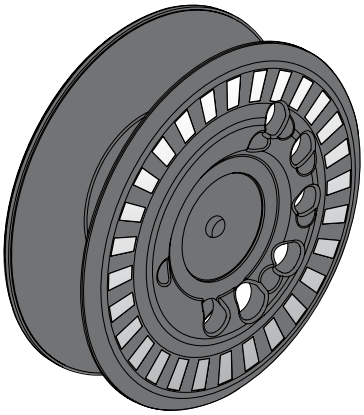

The 830 bobbin, exclusive to BERNINA, supplies till 40% more lower thread. If the bobbin is not inserted correctly, an error message is displayed.

You can preselect a bobbin fill of 25%, 50% or 100%.

Treat the bobbins with care. Keep the white sensor surfaces free of scratches or stains to ensure correct functioning of the lower thread indicator. Store the bobbins in the respective compartment of the accessories box.

Winding the Bobbin

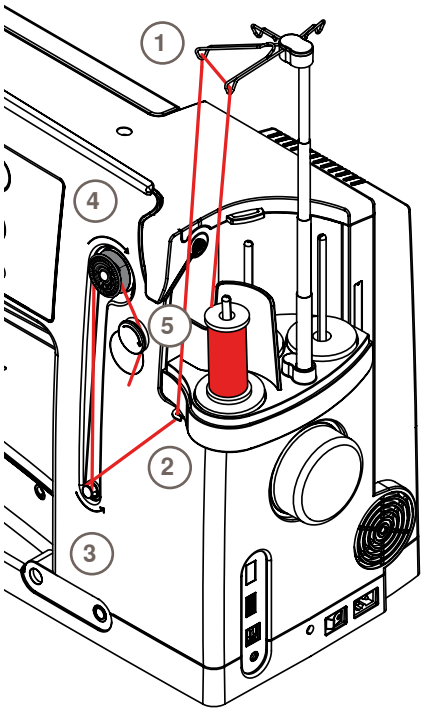

Preparation

- turn power switch on (to «I»)
- place empty bobbin on Pin, white mark in front
- the bobbin winding screen appears
- the amount of bobbin fill is recognized by the system and displayed by bar below the selectable bobbin fill
- place thread spool on the front spool pin and thread the respective guides 1 on the telescope

Winding the Bobbin

- hold thread with both hands, guide the thread in the thread guide on the swivel plate 2 in the direction of the arrows and around the bobbin pre-tension 3
- wind the thread one to two times around the empty bobbin 4 following the direction of the arrows and pull any excess thread in the direction of the arrows, cut off on the thread cutter 5
- select the bobbin filling, standard = 100%
- «Start» field = touch bobbin symbol
- adjust the winding speed with the «+» or «-» icon or with the stitch width knob
- winding process stops as soon as the selected fill percentage is reached
- remove the bobbin and pull the thread over the thread cutter
- the screen is closed

Manual Winding Mode

- touch «man»
- the winder will run as long as the «bobbin» icon is pressed

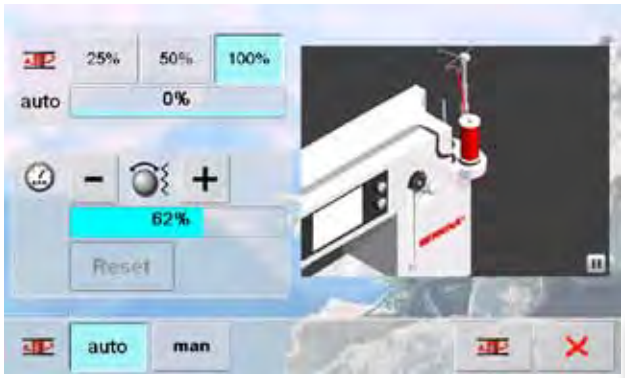

Interrupting the winding process

- the winding process can be interrupted by touching «Start»-(bobbin) icon, and the screen closed by touching ✕

- Continuing the winding process
  - touch «bobbin» icon (it appears in the place of the clock) = the winding screen opens
  - touch «Start»-to start winding process

It is possible to wind the bobbin while embroidering.
We recommend, however, to reduce the winding speed.

Removing/Inserting the Bobbin

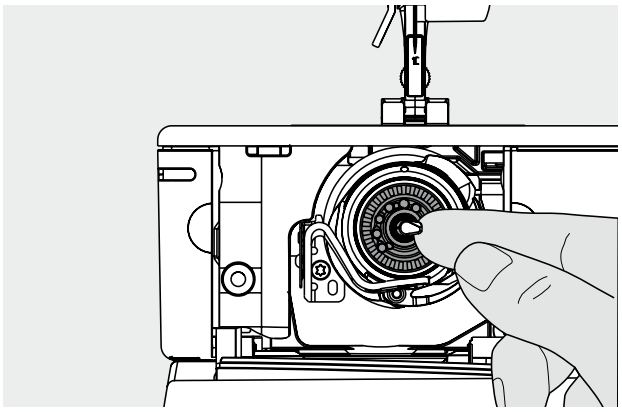

Removing the Bobbin

- open bobbin cover, the hook system swings to the front
- push the latch in the center of the bobbin to the left, the bobbin pops out and can be removed

Inserting the Bobbin

- with bobbin markings facing the front, place the bobbin into the hook and push until it clicks into place

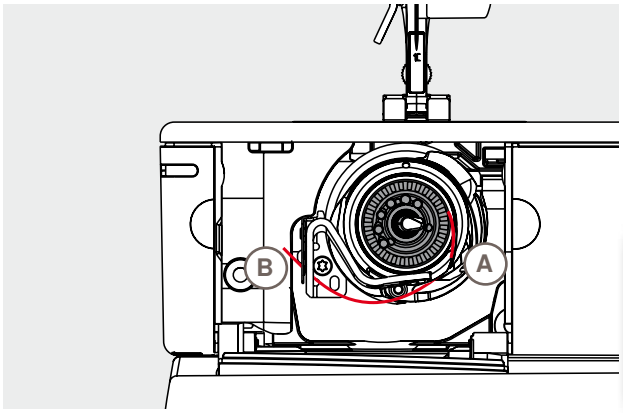

Threading Lower Thread

- pull the thread to the right into slit **A**, then left under the spring
- pull thread over thread cutter **B** and cut
- close the bobbin cover slowly, the hook swings back to the rear

The bobbin thread does not have to be brought up as the loose end is just the right length to start sewing.

Only remove the bobbin if the hook is at the end position (threading position).

Check the threading path

After threading the hook, hold the mirror under the swung-out hook unit as shown in the pictures below.

- Position of bobbin thread when threaded for sewing

Slide-on Table

The slide-on table increases the sewing surface.

Attaching the Table

- raise the needle and presser foot
- from the left, push table to the right over the free-arm and push firmly so that it engages over the fixing cam

Removing the Table

- raise needle and presser foot
- press the button down and remove to the left

Remove the slide-on table only when bobbin cover is closed.

Seam Guide

- press the release button and insert into the groove (underside of table) from left or right
- can be moved over the entire table length

Scale

- «0» corresponds to the center needle position

Thread Cutter

on Head Frame

- pull both threads from back to front over the cutter
- threads release automatically as soon as the first stitch is sewn

at bobbin winder

- after winding bobbin, pull thread in direction of arrow over thread cutter

Threading the Upper Thread

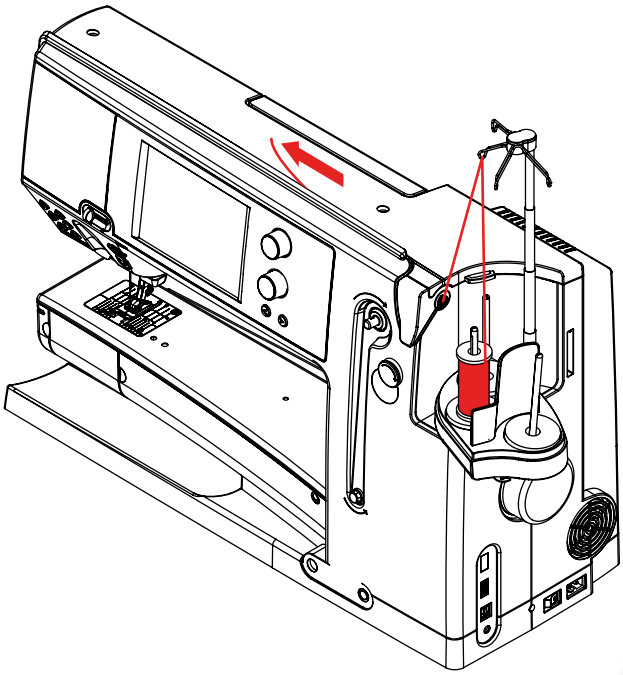

Automatic threading

- place thread spool on the rear or center spool pin
- thread the corresponding guide on the telescopic rod, hold with both hands and guide into the threading opening of the sewing computer, taking it up to the thread guide in the needle clamp **A** and **B** and pull from back to front over the thread cutter **C**
- touch the automatic threader button, a message and an animation appear
- during threading the start-stop button is illuminated red
- if the thread has not been threaded correctly, an error message appears
- close the message with ✕ and start again
- if the thread has been threaded correctly the start-stop button is illuminated green

Manual threading

- follow the two first steps as described above
- touch «Manual threading» icon on screen
- press «Automatic threading» button, then thread the needle by hand

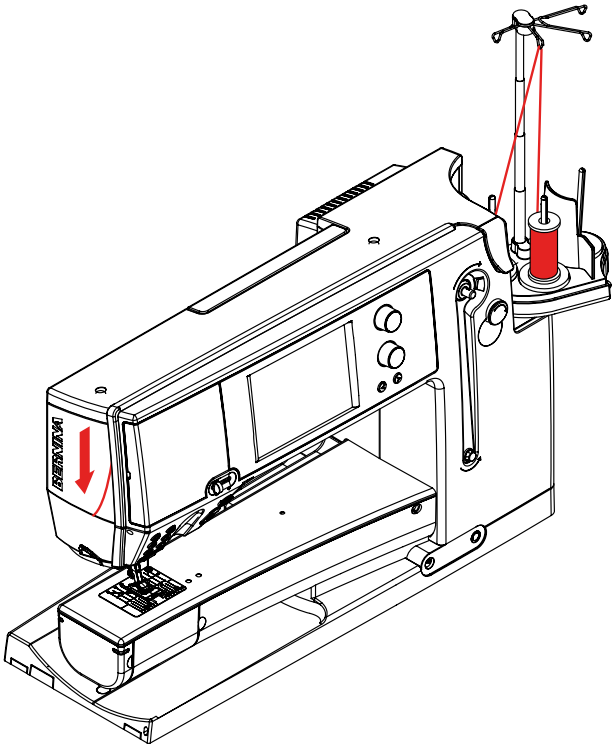

- when using unruly threads, slip the net over the upper thread spool
- large net for large spools, small net for small spools
- this prevents the upper thread from slipping and gives an even thread feed
- place the thread(s) under the presser foot and to the back before starting to sew

Do not start the threaded sewing-/ embroidery computer if there is no fabric on the stitch plate.

The sewing-/embroidery computer must be switched ON for threading.

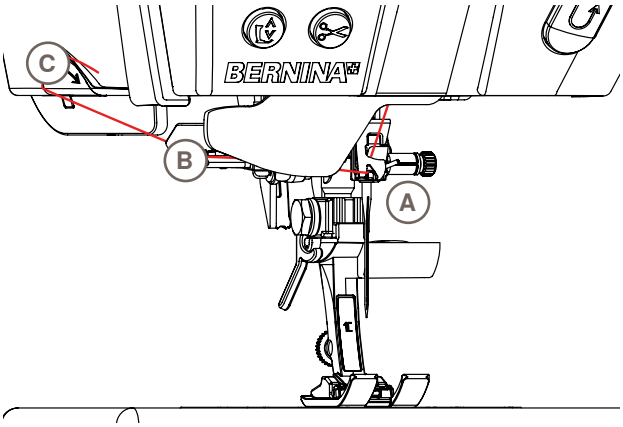

Double/Triple Needle

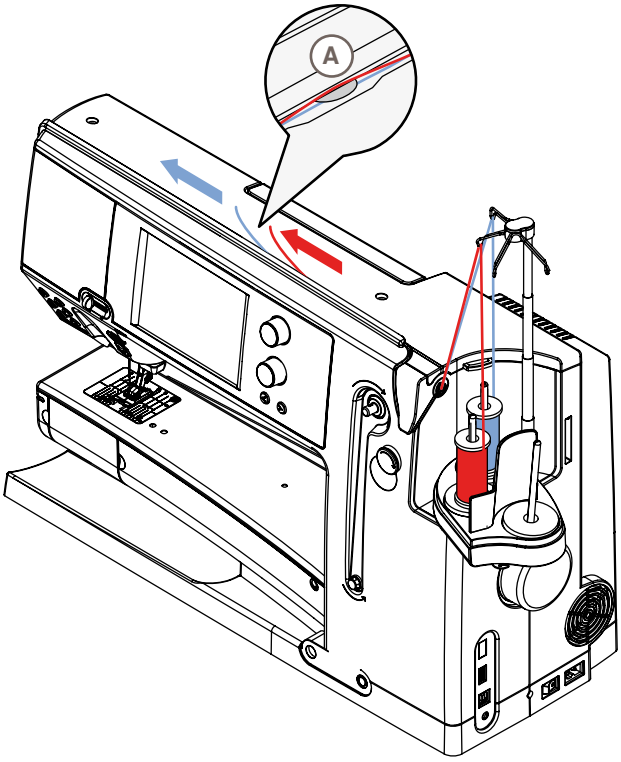

Double Needle

- touch the «Security Program» icon
- touch the appropriate needle icon (double needle) in the Security Program screen
- place a thread spool on the center spool pin and one on the rear spool pin and thread the corresponding guides on the telescopic rod
- insert the two threads together into the threading slit, guiding the thread of the rear spool pin **behind** the thread-tension disc **A** while guiding the thread of the center spool pin **in front of** the tension disc **A**. Then guide the two threads through the thread guide at the needle clamp
- touch the icon «Manual Threading» on the threading animation screen. Next touch the illuminated automatic threading button
- using the manual threader in your accessory kit, manually thread the left needle and then the right needle

Triple Needle

- in the Security Program select triple needle
- place a thread spool on each spool pin and thread the respective guides on the telescopic rod
- thread as usual, guiding the thread from the rear and center spool pin in the threading slit **to the rear of** thread tension disc **A** and the thread from the front spool pin **in front of** the tension disc **A**

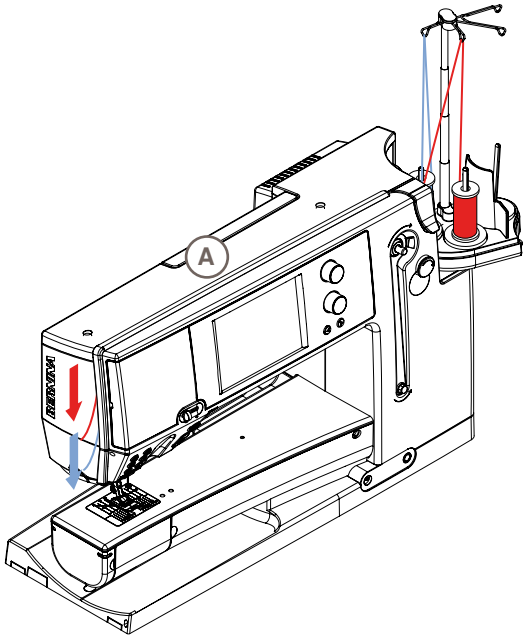

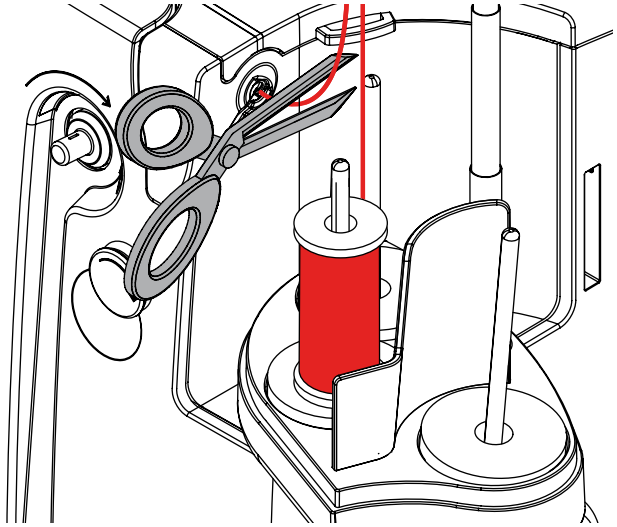

Changing the thread

- cut the spool thread before the pre-tension and pull out of the sewing computer **to front** near the needle

Thread-Guide-and-Lubricating Unit

As a thread-guide eyelet (Fig. 1)

Use the unit without lubricator for a controlled guiding of the thread into the pretensioner, e.g. when using lively thread types.

As a thread lubricator (Fig. 2)

Using the lubricator is advisable when using e.g. threads with high function values, metallic threads, loosely twisted thread types etc. The silicone fluid improves the threads' gliding properties considerably and therefore helps to produce flawless stitching results.

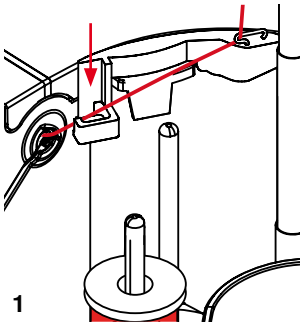
1

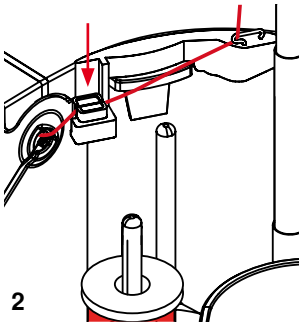
2

Assembly

- insert the unit into the spool-holder cover fixture and push down entirely (Fig. 1)
- insert the lubricator into the holder on the left side of the unit, taking care to place the lubricator in such way that the openings for the thread are in line with the thread flow or thread direction (Fig. 2)
- moisten the felt, add a few drops of silicone fluid
- place the thread spool onto the middle or rear spool pin as usual. Then guide the thread through the respective eyelet of the telescopic rod and the eyelet of the thread-guide-and-lubricating unit
- hold the thread with both hands, pull it in to the slit of the felt, pulling it down as far as it goes so that it'll stay in the felt during machine operation (Fig. 3)
- continue and complete threading the sewing computer as normal
- take care that the felt remains moistened. It mustn't dry out. Apply some drops of silicone fluid once in a while to keep it moist

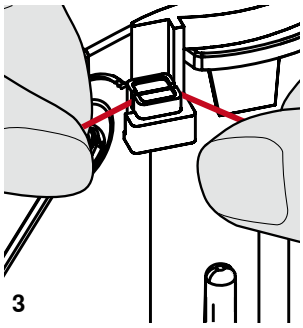
3

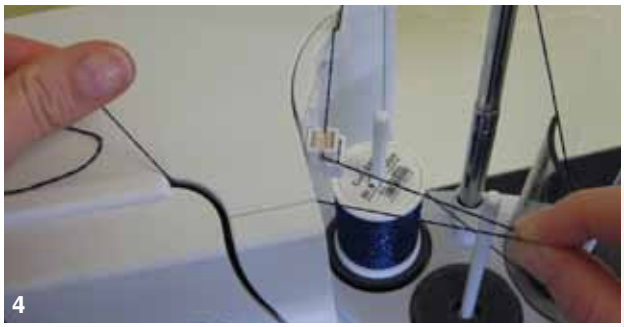
4

- during the initial threading of the sewing computer and when the radial thread release is used it is advisable to pull an extra inch of thread from the spool before the threader button is pushed (Fig. 4)

The silicone fluid must ONLY be used for thread lubrication. Never use it to lubricate the hook system!

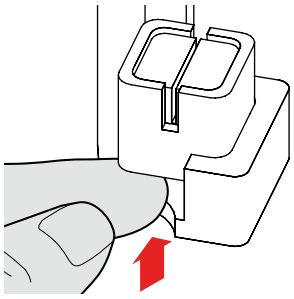

When using the Thread-Guide-and-Lubrification Unit and depending on the type of thread used it might be necessary to reduce the upper-thread tension slightly to achieve perfect stitching results,

- to remove the Thread-Guide-and-Lubrification Unit, push the entire unit up

Reattach the Thread-Guide-and-Lubrification Unit. Thread the sewing computer as usual, including the eyelet of the unit (Fig. 2).

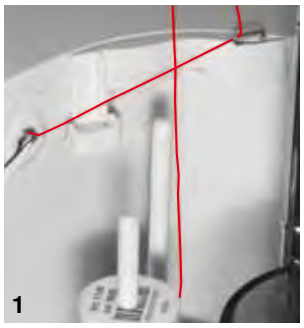
1

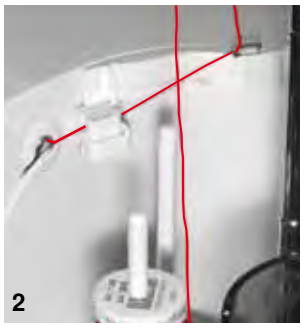
2

Various Options of Application

- **Vertical thread** unwinding (with or without lubricator) from normal spool pin or optional multiple spool holder (Fig. 1-3)

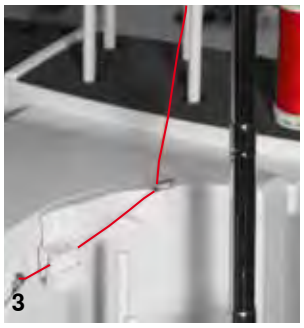
3

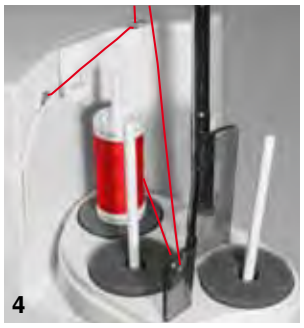
4

- **Radial thread** unwinding (with or without lubricator) (Fig. 4)
- during the initial threading of the sewing computer and when the radial thread release is used it is advisable to pull an extra inch of thread from the spool before the threader button is pushed (Fig. 5)

Radial Thread Guide

How to use the thread guide

- it is preferable to replace the standard foam disc with **the foam rotary disc** (with white plastic inner part) on the rear spool pin

The extra thread guide ensures the consistent thread release, when using threads i.e. metallic, lively or even wounded thread spools.

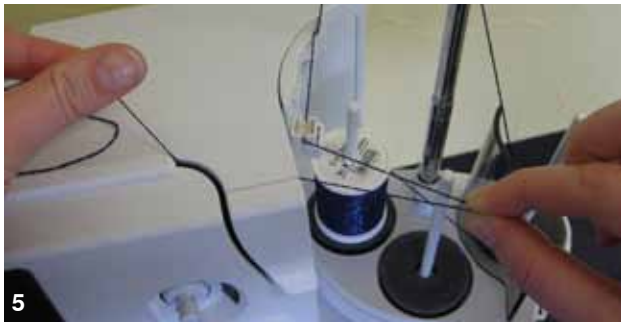
5

- place thread spool on spool pin and guide thread through thread guide. Then run thread via middle eyelet of telescopic rod. Continue threading the sewing computer as normal
- during the initial threading of the sewing computer and when the radial thread release is used it is advisable to pull an extra inch of thread from the spool before the threader button is pushed

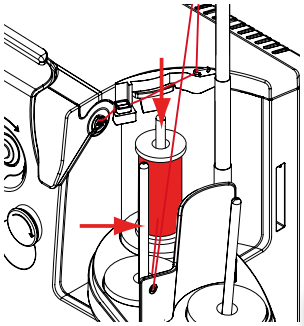

Any of the two spool pins (see arrow markings) can be used. However, it is best to use the rear pin due to its more favourable unwinding angle. Refrain from using the pin of the winder.

In order to achieve perfect stitching results, it might be necessary to reduce the upper-thread tension slightly when using the radial thread unwinding and depending on the thread used.

It is absolutely essential to use the correct foam disc under the thread spool.

Changing the Needle

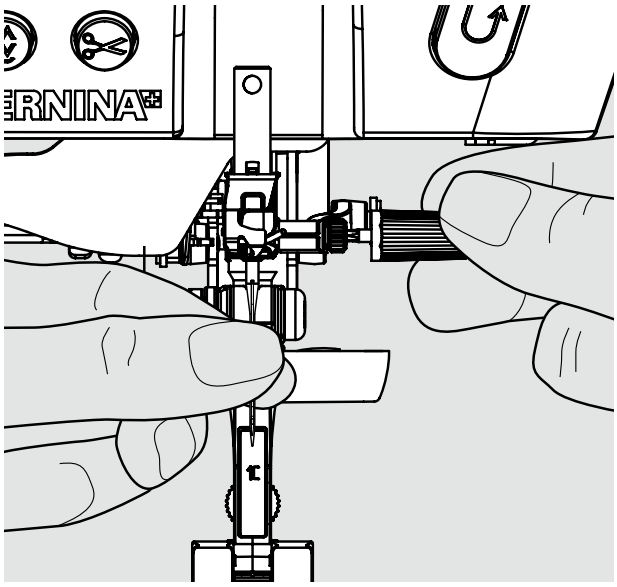

- raise the needle
- lower the presser foot and turn the power switch to «0»

Removing the Needle

- loosen the clamp screw with the gray screwdriver and pull needle down

Turn the handwheel to lower the needle in order to get better access to the fastening screw.

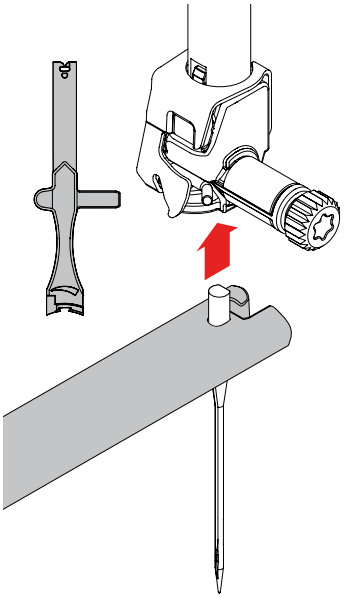

Inserting the Needle

- flat side of needle to the back
- insert the needle with the mulitfunction tool as far as it will go
- tighten needle clamp screw

Changing the Presser Foot

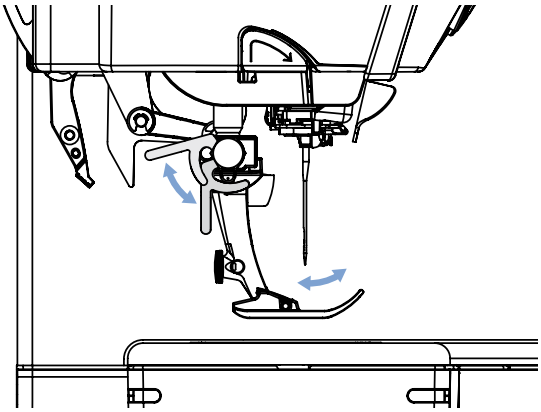

- raise the needle and presser foot
- turn power switch to «0» (off)

Releasing the Presser Foot

- raise the clamping lever
- remove presser foot

Attaching the Presser Foot

- guide the presser foot upwards over the cone
- touch the clamping lever down

Stitch plates

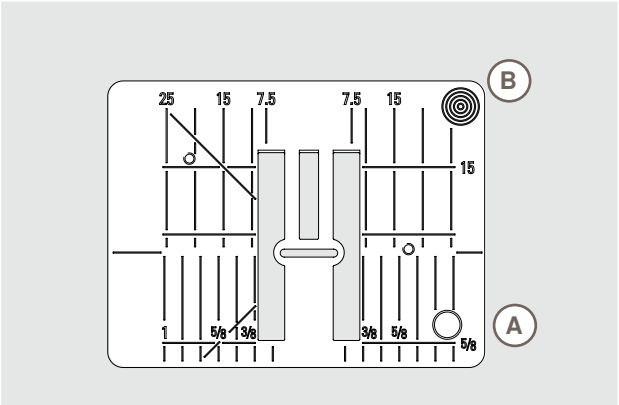

9mm

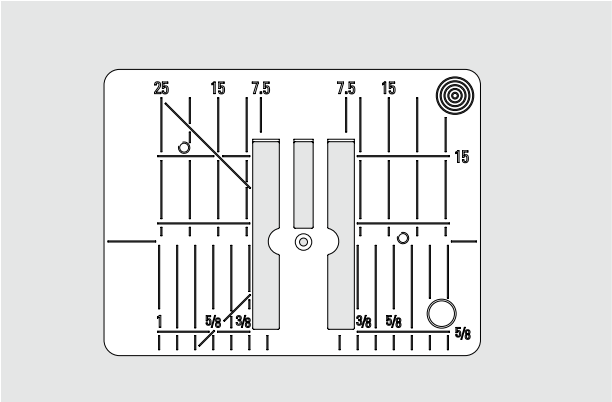

Straight Stitch Plate

Stitch Plate Markings

- the stitch plates are marked horizontally, vertically and diagonaly in mm and inches
- markings help with sewing e.g. precise seaming and top stitching
- horizontal markings are helpful for sewing corners and buttonholes etc.
- diagonal markings are helpful for Quilt piecing
- the vertical markings refer to the distance from the needle to the marking
- needle insertion point is position «0» (= center needle position)
- measurements are marked to the right and to the left of center needle position

Removing the Stitch Plate

- raise the presser foot and needle
- turn power switch to «0» (off)
- press the stitch plate down at the right back corner **B** until it flips up
- remove stitch plate

Replacing the Stitch Plate

- place the stitch plate over the opening **A** and press down until it clicks into place

Changing the Stitch Plate
On attaching the straight-stitch plate or the 5.5-mm stitch plate, it is imperative to adjust the settings in Security Program accordingly (see p. 35).

Feed-Dog and Fabric Feed

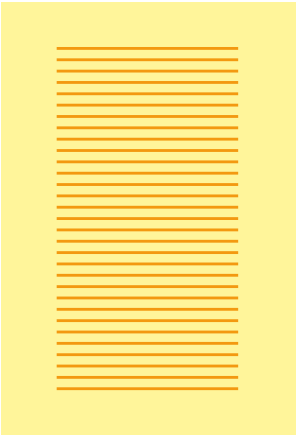

Let the fabric feed fabric evenly.

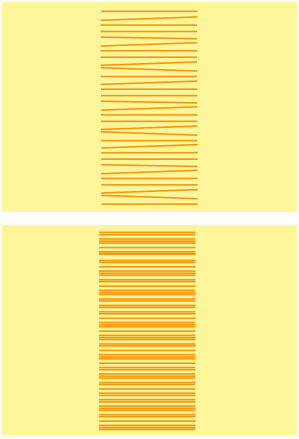

Pulling, pushing or holding back the fabric will result in uneven stitches.

With each stitch the feed-dog moves forward one step. The length of this step is determined by the stitch length selected.

With a very short stitch length the steps are very short. The fabric moves relatively slowly under the presser foot, even at full sewing speed, e.g. buttonholes and satin stitch and decorative stitches are sewn with a very short stitch length.

Sewing with the Height Compensation Tool

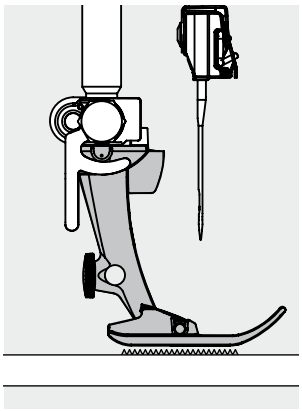

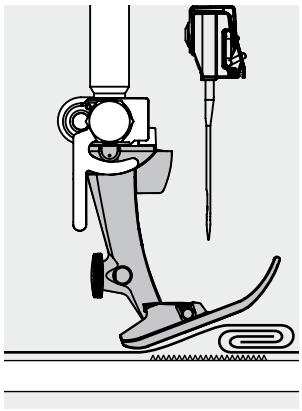

The feed-dog works accurately if the presser foot is level.

If the presser foot is at an angle when sewing over a thick seam, the feed-dog cannot grip. The fabric may jam.

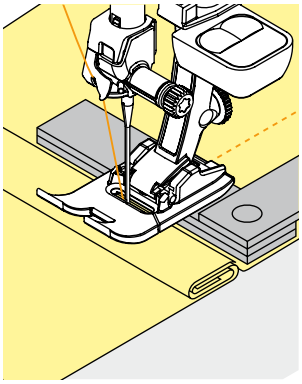

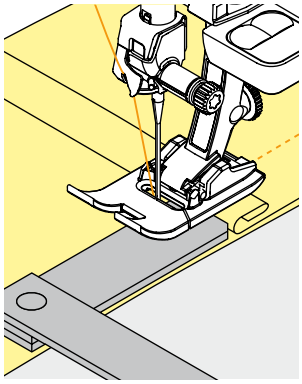

To level the presser foot as required, place one, two or three height-compensating plates behind the needle under the presser foot.

To level the front of the foot, place one or more plates under the right of the presser foot close to the needle. Sew until the presser foot has passed the thick area and remove the plates.

Sewing Corners

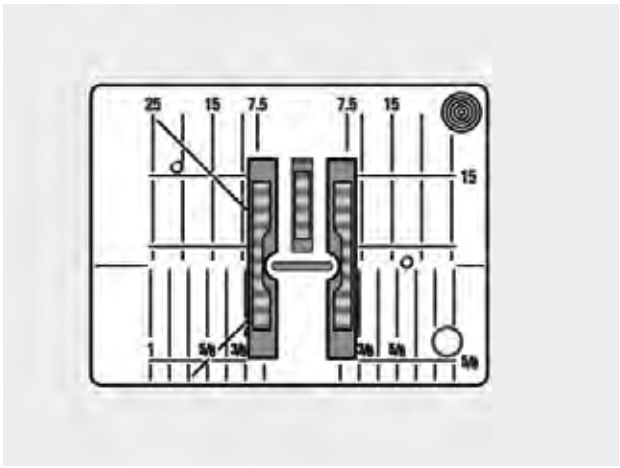

Due to the width of the stitch plate hole the outer feed-dog rows are relatively far apart.
When sewing corners the fabric does not feed well, since only a part of the fabric is on the feed-dog.

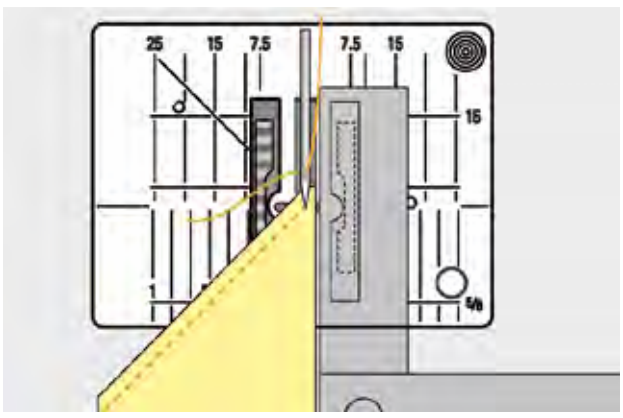

Correct this by placing one or more plates close to the edge of the fabric.

Thread Tension

Upper Thread Tension

Higher upper thread tension = the upper thread is tightened, which pulls the lower thread up to the topside of fabric.

Lower upper thread tension = the upper thread is loosened, which enables it to be pulled to the backside of the fabric.

Basic settings are applied automatically when a stitch pattern or program is selected.

Optimal upper thread tension is set in the factory. For this, Metrosene threads 100/2 weight (Mettler, Switzerland) are used in the bobbin and also in the upper thread.

When using decorative thread, tension adjustments may be neccessary to receive optimal stitching results.

Altering the Tension

- touch the icon and the optimal stitch formation (stitch formation in the fabric) is displayed
- the red bar on the scale shows the basic value
- turn the stitch width or stitch length knob to the left or the right = the thread tension is loosened or tightened
- the tension alteration is indicated on the right side of the thread tension scale
- the tension alteration only affects the stitch selected
- the alteration is shown on the scale (red) and in the function icon
- the basic setting remains visible (gray) when a change is made
- the settings are saved by touching ✔
- touch «Reset» to return to basic settings
- touch ✘, settings do not change
- delete: with «clr», «Reset», also when turning off the sewing computer

If the thread tension is set to a value below 1 for embroidery, there is a higher risk of unwanted loop occurrence. A warning message will appear.

Lower Thread Tension

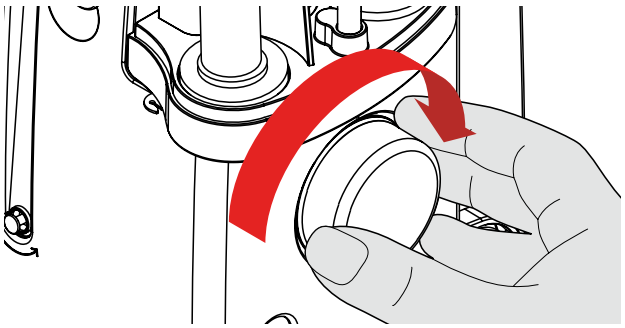

- hold bobbin case firmly with your left hand; with your right hand, turn the hand wheel clockwise until the setting tool can be slid over the lug at the slider
- basic value:
  - lug of the slider matches with the marking of the bobbin carrier, or
  - lug is shifted 1-2 points to the right, or
  - lug is shifted 1-2 points to the left
- turn lug to the left with the setting tool = thread tension becomes looser
- turn lug to the right with the setting tool = thread tension becomes tighter
- change per point = 4 g

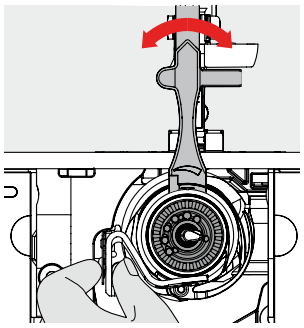

- bring hook into the position shown in the illustration by turning the handwheel clockwise in order to be able to thread it properly

Important facts about Thread and Needles

Thread

The thread is chosen according to its intended use. For a perfect sewing result, thread and fabric quality play an important role. Use of quality brands is recommended.

Cotton Thread

- cotton thread has the advantage of being a natural fiber and is therefore particularly suited for sewing cotton fabrics
- mercerized cotton thread has a slight sheen and is preshrunk

Polyester Thread

- polyester thread has a high tensile strength and is particularly colorfast
- polyester thread is more resiliant than cotton thread and is recommended where a strong and elastic seam is required

Needle, Thread and Fabric

Care should be taken when matching the needle and thread.

The correct needle size does not just depend on the thread selected but also on the fabric to be used. The fabric weight and type determines which thread weight, needle size and needle tip to use.

Checking Needle Condition
The condition of the sewing needle should be checked and the needle replaced regularly. A defective needle does not just damage the fabric but also the sewing computer.

As a guide:
Replace the needle before starting a new sewing project.

Needle/Thread

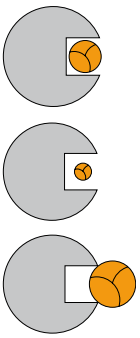

Correct Combination

To sew optimally, the thread should travel smoothly down the long groove on the front of the needle.

Thread Too Thin or Needle Too Thick

The thread has too much clearance in the groove; there may be skipped stitches or damage to the thread.

Thread Too Thick or Needle Too Thin

The thread rubs on the edges of the groove and can get jammed. This can break the thread.

Guidelines

Fabric/Thread	Needle size
Fine fabrics: Fine thread (darning thread, embroidery thread)	70–75
Medium weight fabrics: Normal thread	80–90
Heavy weight fabrics:	100, 110, 120

130/705 H - S / 70

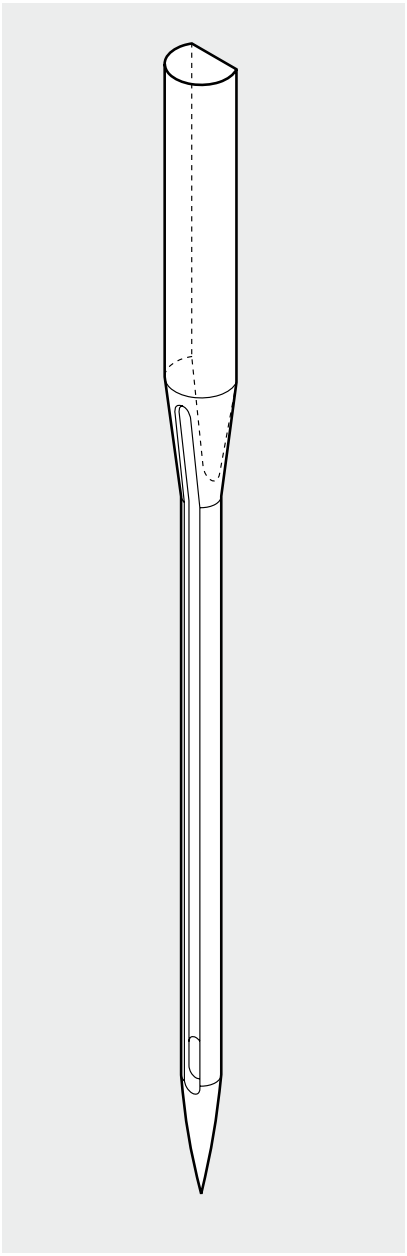

130 Shank length

705 Flat shank

H Needle scarf

S Needle point (here e.g. medium ball point)

70 Needle size (shank diameter)

Overview

Universal
130/705 H/60–100

Normal point, slightly rounded

For nearly all natural and synthetic fabrics (woven and knitted)

Jersey/Stretch
130/705 H-S, H-SES, H-SUK/70–90

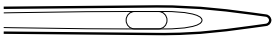

Ball point

Jersey, stretch fabrics

Leather
130/705 H-LL, H-LR/90–100

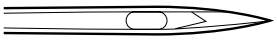

With cutting point

All types of leather, synthetic leather, plastic, sheeting

Jeans
130/705 H-J/80–110

Very fine sharp point

Heavy weight fabrics such as jeans, canvas, overalls

Microtex
130/705 H-M/60–90

Especially fine sharp point

Micro fiber fabrics and silk

Quilting
130/705 H-Q/75–90

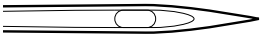

Fine sharp point

Straight and topstitching

Embroidery
130/705 H-SUK/70–90

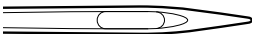

Large eye, slight ball point

Embroidery on all natural and synthetic fabrics

Metafil
130/705 H-MET/75-90 or H-SUK/90-100

Large eye

Sewing with metallic threads

Cordonnet (Topstitching)
130/705 H-N/80–100

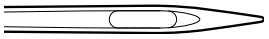

Small ball point, long eye

Topstitching with thick thread

Wing needle (hemstitch needle)
130/705 HO/100–120

Wide needle (wing)

Hemstitching

Double wing needle
130/705 H-ZWI-HO/100

For special effects with hemstitch embroidery

Double needle
130/705 H-ZWI/70–100

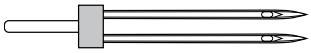

Needle distance: 1.0/1.6/2.0/ 2.5/3.0/4.0/6.0/8.0

Visible hems in stretch fabrics, pin tucks, decorative sewing

Triple needle
130/705 H-DRI/80

Needle distance: 3.0

For decorative sewing

Functions & Settings

Overview 30

Function Buttons 30

Display 32

Functions 34

Sewing 34

Setup Program 36

Entry Screen 36
- Display 37
- Wallpaper 37
- Sewing 38
- Securing stitches on/off 38
- Embroidery 40
- Adjusting Embroidery Settings 40
- Fabric Thickness 40
- Calibrating the Hoop 40
- Screen Calibration 41
- Monitoring 42
- Information 43
- Version 44
- Service Data 44
- Update 44
- Cleaning the sewing/embroidery computer 45
- Cleaning 45
- Cleaning the needle threading mechanism 45
- Lubricating the hook 45
- Packing position 46
- Calibrating buttonhole foot no. 3A 46
- Reset/Delete User Data 47

Tutorial 48

Overview of Topics 48

Creative Consultant 49

General 49

Help Program 50

General 50
- Stitch Pattern 50
- Functions 50

Balance 51

Balance Description 51
- Practical and Decorative Stitches 51
- Corrections 51
- Sideways Motion Stitches 51
- BERNINA Dual Feed 52

Balance/Presser Foot Pressure 52

Presser Foot Pressure Settings 52

ECO 53

ECO Description 53

Function Buttons

Start/Stop Button

- starts and stops the sewing computer when operating it without foot control
- slightly raise the presser foot when turning or moving the project while sewing - hover position

Quick Reverse Button/Backstepping

- secures the seam beginning and end: sews in reverse as long as the button is pressed
- used to program the buttonhole length
- used to program the darning length
- used to determine end of stitching in straight stitch Securing stitch no. 5
- used for securing in Quilters Securing Program no. 1324
- switching for accurate stitch-by-stitch back-stepping (exact retracing of the last 200 needle penetrations)

Pattern End

- a stop symbol which appears during sewing indicates that the function is activated
- sewing computer stops at the end of the active single pattern or the active pattern of a combination

Automatic Thread Cutter

- upper and lower threads are cut automatically
- 2-6 securing stitches can be programmed in the setup program - these are sewn before the thread is cut

When using metallic or cordonnet thread, use the thread cutter on the head frame only.

Automatic Needle Threader

- touch button = completes the threading process and threads the needle

Double, triple and wing needles require manual threading after the button has been pressed.
Use the automatic needle threader for needle sizes 70 - 120. Metallic threads, thick threads like cordonnet and difficult to work with threads should be threaded by hand.

The automatic threader mustn‘t be activated with one of these presser feet attached:
nos. 50, 55, 80, 85 and 86.

Needle Stop Up/Down

In the default setting the needle symbol is displayed above the presser foot indicator.

- touch the button briefly:
  - the needle is raised or lowered (as when tapping the foot control with your heel)
- touch the button longer:
  - the needle is lowered, the needle symbol is displayed below
  - the sewing computer stops with the needle down
  - this becomes your default setting
- touch the button longer again:
  - the needle is raised, the needle symbol is displayed above
  - the sewing computer stops with the needle up

Presser Foot Position

- touch the button = the presser foot is lowered and raised slightly again so the fabric can be easily positioned. When sewing starts the foot is lowered on to the material
- touch the button again = the presser foot is raised and the Feed-dog is simultaneously lowered

Automatic Securing Program

- touch the button before the sewing starts or during sewing = single patterns are secured at the end, with the selected number of stitches programmed
- touch the button before starting a combination = the first pattern is secured at the end, with the number of stitches programmed
- touch the button while stitching a combination = the active pattern is secured at the end, with the number of stitches programmed
- the sewing computer stops automatically after all securing variations
- the number and type of the securing stitches can be programmed in the setup program

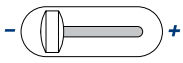

Slide Speed Control

- the motor speed is infinitely variable with the slide

Altering Needle Positions

- touch left button – the needle moves to the left
- touch right button – the needle moves to the right
- quick change – hold the button down
- total of 11 needle positions (5 left, 5 right, 1 center)

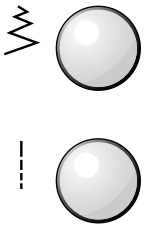

Stitch Width/Length (Multi-function) Knobs

- to adjust stitch width or length
- to alter thread tension
- to alter presser foot pressure
- to adjust the sewing direction when in «directional sewing»
- to adjust button size or the slit size of the buttonhole
- to adjust the balance

Display

Menu Selection

A Practical stitches
B Decorative stitches
C Alphabets
D Buttonholes
E Quilt stitches
F Personal Program
G History

System Settings

H Setup Program
I Tutorial
J Creative Consultant
K Help
L ECO
M Embroidery/Sewing mode
N clr - Delete

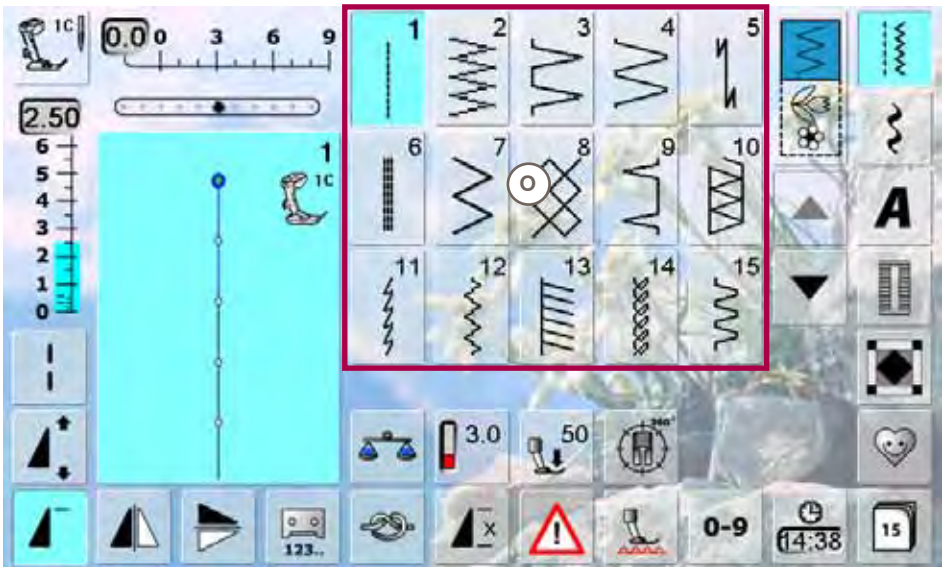

Stitch Display

O Stitch Pattern selections

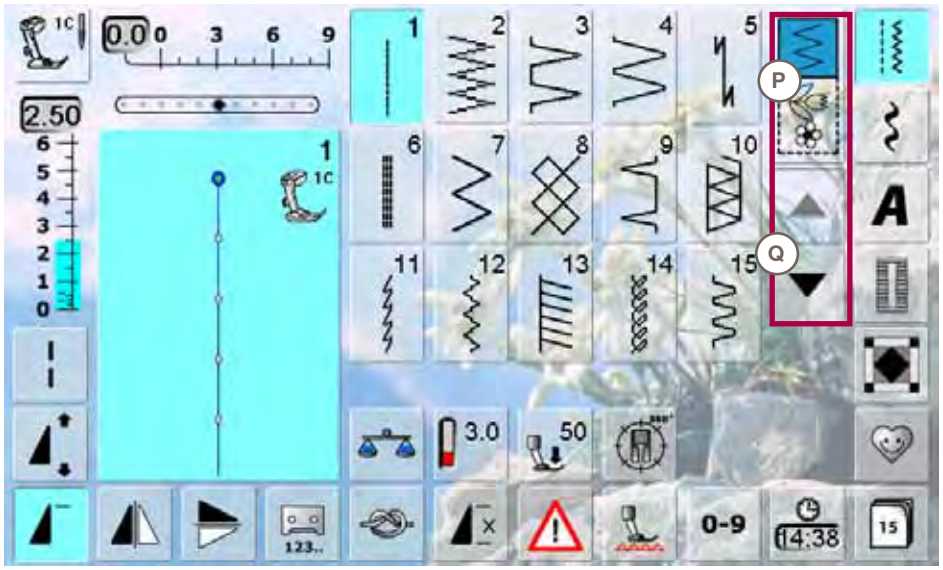

Selection

P Single/Combi mode
Q Scroll up/down

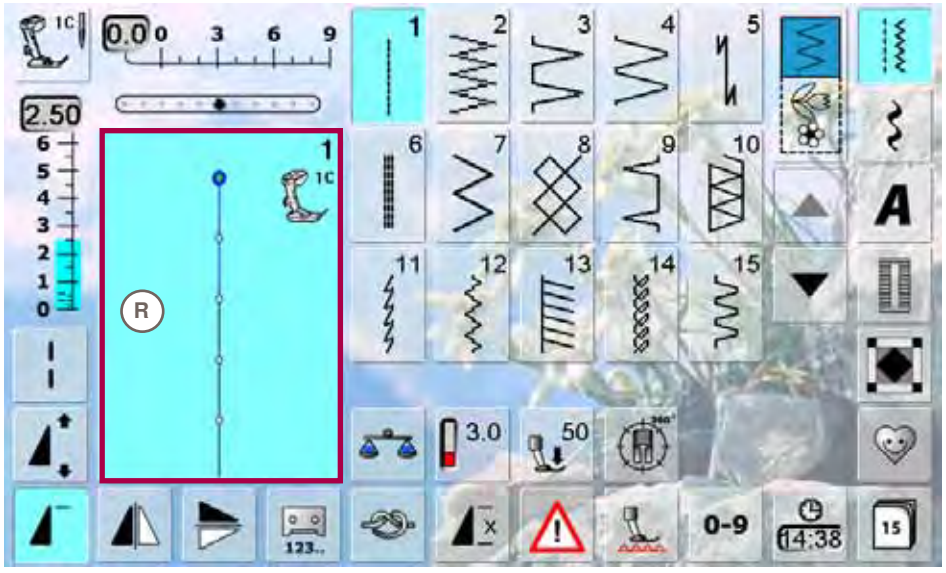

Stitch Altering Area

R Display of the stitch pattern selected

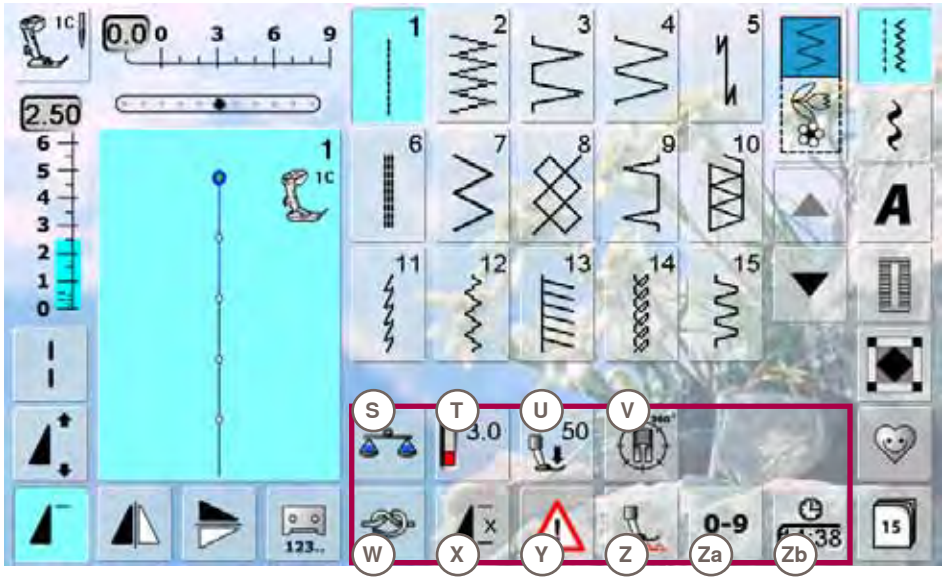

Functions

S Balance
T Thread tension
U Pressure foot pressure
V Multi-Directional sewing
W Securing function
X Pattern repeat
Y Security program
Z Lower Feed Dog
Za Stitch selection by number
Zb Time/Alarm

Active functions are highlighted in blue, inactive functions are gray.
The multifunction keys are switched off by keeping them pressed a few seconds.

Confirm Selection
- activate or confirm change/selection

Leave Active Screen
- close application
- return to the last active screen

Long stitch
- the sewing computer sews every second stitch (max. stitch length 12mm)
- can be used for practical and decorative stitches
- exception: buttonholes and sideways motion stitches

Mirror Image (Up/Down)
- the sewing computer sews the selected stitch pattern in vertical Mirror Image (up/down – determined by the sewing direction)

Mirror Image (Left/Right)
- the sewing computer sews the selected stitch pattern in horizontally Mirror Image (left/right – determined by the sewing direction)

Stitch Counter
- when the desired length is achieved (e.g. first buttonhole bead or straight stitch), touch the Quick Reverse Button
- the display changes to «auto» (for the buttonhole, only after length of second bead is determined by pressing the Quick Reverse Button)
- the stitch pattern selected is temporarily programmed

Pattern Extend 2-5x
- touch the icon one or more times, the numbers 2-5 appear
- stitch integrity is maintained
- stitch pattern is extended

Pattern begin
- the needle moves to the beginning of a stitch pattern or program

Buttonhole Length Direct Entry
- enter buttonhole length via stitch width or stitch length knob. Number in mm

Pattern repeat 1-9x
- touch the icon several times, the numbers 1-9 appear
- number 1: the sewing computer stops at the end of an individual stitch or stitch combination
- numbers 2-9: the sewing computer stops at the end of a stitch or stitch combination after the number of repeats selected

Moving single stitch patterns
- move single stitch patterns of combinations horizontally, vertically or diagonally

Moving multiple stitch patterns
- move parts of stitch patterns combinations horizontally, vertically or diagonally

Retrieve
- switches between the stitches combined
- active stitch is shown in color and can be moved

Manual Buttonhole
- special screen appears
- sew manual buttonhole in 5 or 7 steps (depending on buttonhole type)

Programming Buttonhole Length
- icon is automatically highlighted in blue when a buttonhole is selected
- set the buttonhole length with the Quick Reverse Button or directly program the length displayed by pressing the icon

- function turns inactive after programming the length
- if a new length is to be programmed, touch icon again

Feed-dog position
- touch the icon «lower feed-dog» = feed-dog is lowered

- the lowered feed-dog is shown by the red, flashing symbol

Buttonhole Slit Width
- set the buttonhole slit width to between 0.1mm and 2.0mm using the Stitch Width or the Stitch Length Knob
- the standard width is 0.6mm

Securing
- touch icon before sewing starts = single pattern is secured at the start with 4 securing stitches
- touch icon during sewing individual stitches = individual stitches will be secured at the end, the sewing computer stops
- program the function within a pattern combination = each individual pattern of the combination can be secured at the start or the end

Multi-function button
- only active in combination mode
- when selected, a screen with further functions appears

Lettering size in alphabets
- when alphabet is selected, the lettering size is 9mm
- when the function is selected, «2» is activated and the alphabet is sewn with 6mm lettering size

Lettering size in monograms
- when monogram is selected, the lettering size is 30mm
- touch the icon several times
- the blue area shows the lettering size:
  1 = 30mm (standard)
  2 = 20mm
  3 = 15mm

Connecting Stitches
- opens the screen to add connecting stitches

Combination subdivider (1)
- each combination or memory folder can be subdivided into several parts
- only those parts where the cursor is located will be sewn
- to sew another part, the cursor must be placed in this part

Combination subdivider (2)
- each combination can be subdivided as desired
- after stopping, the needle moves to the next part to be sewn

Presser foot indicator

- number of presser foot recommended is shown for the stitch pattern selected
- if the presser foot is raised it is indicated with an animation
- touch the icon
- screen is opened with further presser foot options

Back Stepping
- the last 200 needle penetrations of a stitch pattern are retraced, i.e. sewn backwards (see p. 80 on how to select the function)

Save
- save stitch pattern combinations and lettering

Delete
- e.g. single stitch pattern, pattern combinations, memory bank contents, stitch pattern in personal program etc.

Balance
- balance forward and reverse stitches
- balance sideways motion stitches
- balance dual feed

Stitch selection by numbers
- select individual stitch pattern by inputting the stitch pattern number

Permanent reverse sewing
- the sewing computer sews backwards permanently (see p. 80 on how to select the function)

Upper/Lower Case
- switch from upper case to lower case lettering

File Drawers
- saved stitches are visible

Thread tension

- change upper thread tension
- the respective value is visible in the icon

Presser foot pressure

- increase or decrease the presser foot pressure using the multifunction knobs
- the respective value is visible in the icon

Time/Alarm

- set the current time (hh:mm) in the upper part of the screen using the «+» and «-» icons
- touch the alarm button in the lower part of the display
- set the alarm time using the «+» and «-» or the multifunction knobs. A personal message can be input using the keyboard
- the current time now appears in red numbers

Multi-Directional Sewing
- use the stitch width knob to rotate the stitch pattern or combination in 0.5° steps, the stitch length knob for 1° steps or the direct-selection buttons for rotating in 45° steps into the desired direction
- the sewing direction is shown in the left part of the display
- the start is marked with a green dot and the end with a red cross
- the function only appears if the selected stitch can be sewn in multiple directions

Test-sew first on a piece of the fabric you intend to use for the sewing project.

Security Program
- when selecting the respective needle icon the stitch width will be limited automatically
- this prevents the inserted special needle (double needle etc.) from hitting the presser foot or stitch plate = avoiding needle breakage
- the numbers on the needles represent the distance in mm between the needles
- by selecting the standard needle icon the standard needle is active again and the stitch width limitation is switched off
- by selecting the corresponding stitch plate the stitch width is automatically limited, so the inserted standard needle cannot hit the stitch plate
- the function remains active even when the sewing computer is turned off and on

Single Mode
- the Single Mode is always active (blue) when turning on the sewing computer and only the selected stitch can be sewn

Combi Mode
- touch the button
- the Combi Mode is active (blue) and stitch combinations can be programmed

Entry Screen

The Setup Program enables you to personalize the touch screen according to your own requirements and preferences.
After setting the sewing computer to your personal requirements, all changes made in the Setup Program are saved, even when the sewing computer is switched off. Exceptions from this rule are outlined within the description of the function concerned in each case.

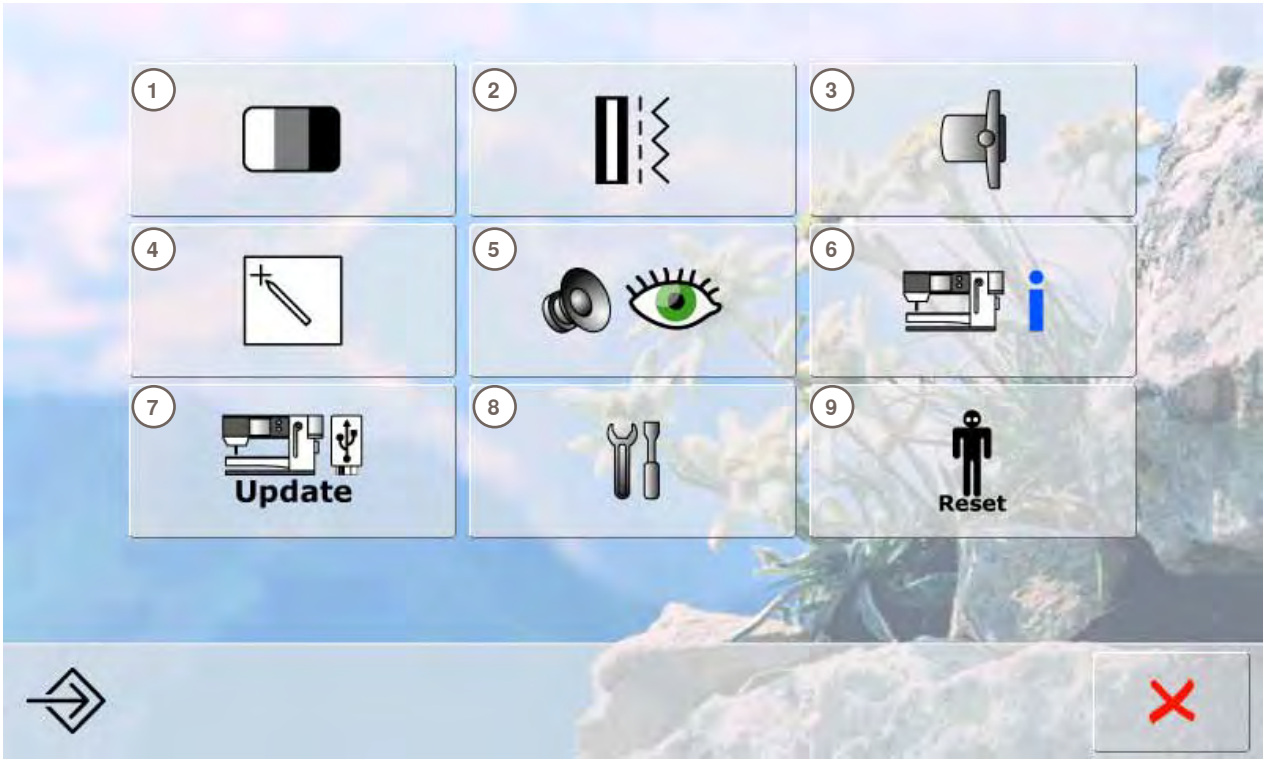

Selection Menu

1 Display (screen) settings
2 Sewing settings
3 Embroidery settings
4 Display (screen) calibration
5 Monitoring settings
6 Information
7 Update sewing computer
8 Cleaning the sewing/embroidery computer
9 Reset basic settings

Customized alterations are saved even when the sewing computer is switched off. Alterations can be re-programmed at any time.

The System Settings can be changed using the stitch width and stitch length knobs and the «+/-» icons.
«Reset» button resets to the basic System Settings.

Display

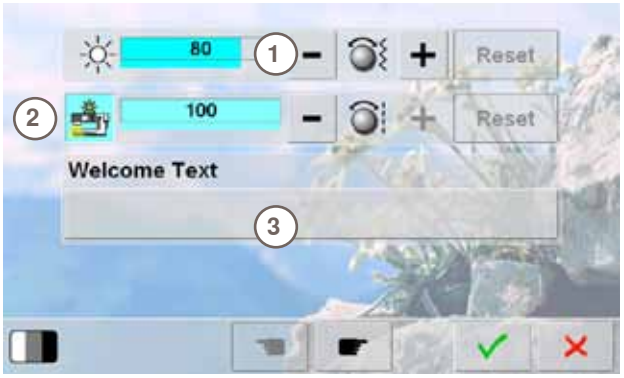

Brightness

- turn stitch width knob or touch the «+» or «-» icon the brightness 1 of the screen is altered
- alterations are indicated by the number in the bar and the blue background of the «+» or «-» icons
- the basic settings are indicated by a dark bar

Sewing Light

- when icon 2 is active, the sewing light is on
- when the icon is inactive, the sewing light is off
- the brightness can be set with the stitch length knob or the «+» or «-» icon

Welcome Text

- create or change Welcome Text 3
- space bar is at the bottom of the letter keys
- welcome text 4 appears in the text icon above the letter keys
- touch the text icon = text entered is completely deleted

- text entered is deleted from right to left

- «ABC» all in upper case (standard)
- «abc» all in lower case
- «1,2,3» numbers and mathematical character
- «Ä À Á», «ä à á» and «@ #» upper and lower special characters

Wallpaper

Select desired screen wallpaper.

- choose from different images
- default image = edelweiss

Sewing

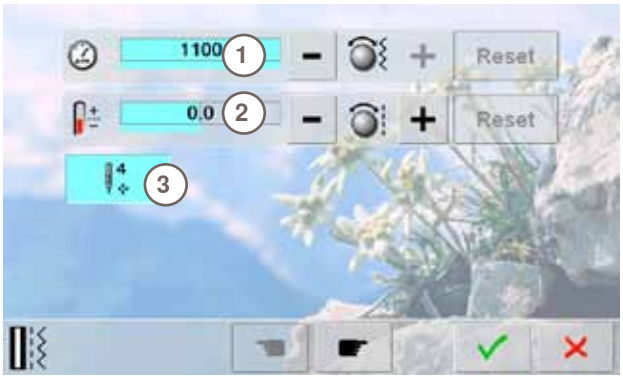

Motor Speed

- alter maximum sewing speed **1**
- the number in the bar is the stitches per minute; the basic value is indicated by a dark bar

Thread Tension

- alter the basic setting (0) of the upper thread tension **2** by plus or minus 20%
  0 = basic settings

> The tension alteration affects all stitches and stitch patterns and is saved even when the sewing-/embroidery computer is switched off.

Securing stitches on/off

- function **3** is active = standard
- if the automatic thread cutter is used to cut the threads, 4 securing stitches will be stitched when resuming sewing
- function is inactive = no securing stitches will be stitched

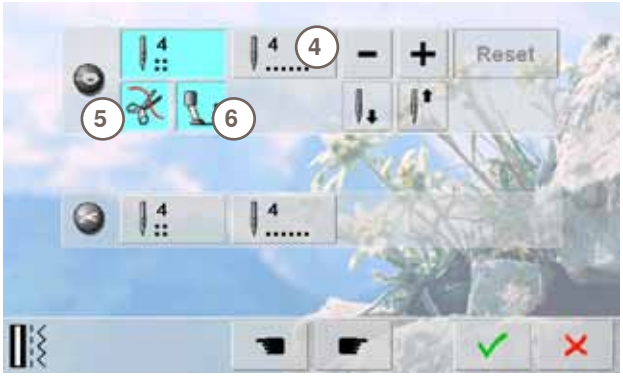

Automatic Securing Program

- the number and type of the securing stitches can be programmed
- standard = four securing stitches in the same place
- select function **4** for forward securing stitches
- 3-6 securing stitches can be programmed

Automatic Thread Cutter

- if function **5** is activated, the upper and lower thread are automatically cut after sewing

Raise Presser Foot

- if function is activated **6** the presser foot is raised after securing
- if function is not activated, the presser foot stays down

Needle Stop Adjustment

- if the automatic thread cutter and the «raise presser foot» function are switched off when securing, the needle stop position 7 can be selected
- standard = sewing computer stops with the needle up while the presser foot stays down after securing
- touch «Needle down» icon
- the sewing computer stops with the needle down after securing

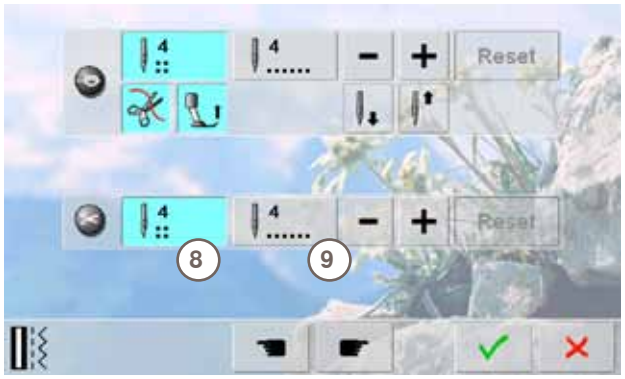

Automatic Thread Cutter and Securing Stitches

- the number and type of securing stitches before the thread is cut can be programmed
- touch function 8 for securing stitches in place or function 9 for forward securing stitches
- two to six securing stitches can be programmed
- standard = no securing stitches programmed

Presser foot position when needle stop down

- with activated icon 1, the presser foot remains down when the sewing computer stops
- with activated icon 2, the presser foot is raised enough to pivot the fabric (hover position)
- with activated icon 3, the presser foot is raised into its highest position

Hover position of presser foot

- the stitch width and stitch length multi-function knobs can be used to set the clearance from 0mm to 7mm in maximum (standard clearance is 2 mm)
- the set value, i.e. the clearance between the fabric and the presser foot, is displayed in icon 4

Embroidery

Adjusting Embroidery Settings

- the motor speed and thread tension can be adjusted the same way as in sewing mode, and the automatic thread cutter activated or deactivated (will cut the threads at color changes if activated)

Fabric Thickness

- if the fabric 1 is more than 4mm thick, e.g. toweling, select the 7.5mm or 10mm icon
- this ensures that the embroidery hoop is only moved when the needle is no longer in the material

Thread-Cutting After Start of Embroidering

- with active field 2, the embroidery computer will stop after approx. 7 stitches and the thread ends can be cut
- with inactive field, the embroidery computer won't stop

Securing Stitches

- function 3 is active = standard securing
- i.e. selecting a embroidery motif, threading or cutting the threads using the automatic thread cutter will trigger the stitching of 3 securing stitches
- function is inactive = no securing stitches will be stitched, i.e. the lower thread must be taken up either manually (handwheel) or by «back heel kicking» the foot control. The threads must be held when starting to embroider

To calibrate the hoop, select «Next Page».

Calibrating the Hoop

«Adjust Reference Position» calibrates the needle to the center of the hoop.
Adjustments can only be done if the embroidery module is attached.

- select the required hoop and follow the instructions on the screen

- place embroidery template into the embroidery hoop
- the hoop position is detected and the needle positioned in the center
- if the needle is not positioned exactly in the center of the embroidery template, use the arrow icons to position it accurately
- touch ✔ until the selection menu appears
- the adjustment is saved

Screen Calibration

The calibration screen can also be opened this way:

- switch sewing-/embroidery computer off (to «0»)
- touch the two needle positioning buttons on the front panel and keep them pressed
- switch sewing-/embroidery computer on (to «I») and as soon as the calibration screen is opened, release the two buttons

- touch the calibration icon
- another screen appears

- with touch pen touch the center of the cross. The cross moves to the next position
- repeat this until all three positions shown are calibrated
- touch ✔ to save settings

Monitoring

Audio System

- sounds can be activated or deactivated **1**

Selecting Stitch Pattern/Function/BSR

- stitch patterns and function selection **2** can be confirmed acoustically
- touch the speaker icon until you hear the desired sound
- there are six different sounds to choose from
- this icon is blue and the sound is indicated by a number (1-6)
- the sounds for functions (center) and the sound for quilting with BSR (bottom) can be activated or deactivated in the same way
- deactivation is the last option shown when scrolling through the different sounds

Monitoring Functions

The following monitoring functions can be activated or deactivated:

Upper thread indicator
Lower thread indicator
Optimum interlocking of upper and lower thread
Sewing without thread

- blue with open eye = function active
- gray with closed eye = function inactive
- the sound type for the monitoring functions is set in the audio settings for function

Sewing without thread

- don‘t thread the sewing computer with upper thread (or remove it entirely)
- press the large field on the left
- sewing without thread is activated
- the other three monitoring functions are deactivated and disappear
- the automatic thread cutter is deactivated
- selecting another presser foot or switching the sewing computer off deactivates the function

Information

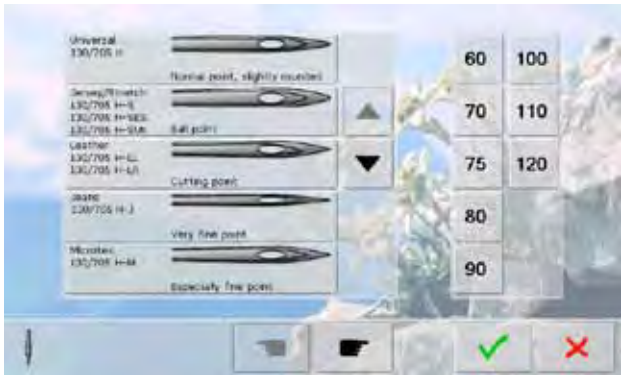

Needle Chart

- select the needle inserted
- when the sewing computer is switched on, the needle selected will be displayed
- touch the arrow icon to scroll through to the needle types

Language

- scroll through the languages by touching the arrow icons and select the language required

Dealer Details

- by pressing the respective gray bar the following information about your BERNINA dealer can be entered:
  - store name
  - last name, first name
  - telephone number
  - website or e-mail address

Version

- the current versions of the sewing computer and the embroidery module (must be connected to the sewing computer) can be seen
- the total number of stitches and the number of stitches sewn since the last servicing by the BERNINA dealer are displayed

Service Data

Service data of the actual condition of your sewing computer can be saved on a USB stick and sent to your authorized BERNINA dealer:

- insert the USB stick into your sewing-/embroidery computer
- touch «LOG»
- after the data is saved remove the USB stick

Update

Updating

- insert BERNINA USB stick with the new software version
- touch «Update»
- touch «Update» again to start the process
- it is then determined if:
  - a BERNINA USB stick is inserted
  - there is enough free space available (at least 10 MB)
  - the correct software version is on the stick
- the data and settings are accepted
- if the update was successful, a message appears and the sewing computer is ready to sew again
- if the update cannot be started or if there are problems during the update process, an error message appears

Do not remove the BERNINA USB stick until there is a message which indicates the end of the update.

Cleaning the sewing/embroidery computer

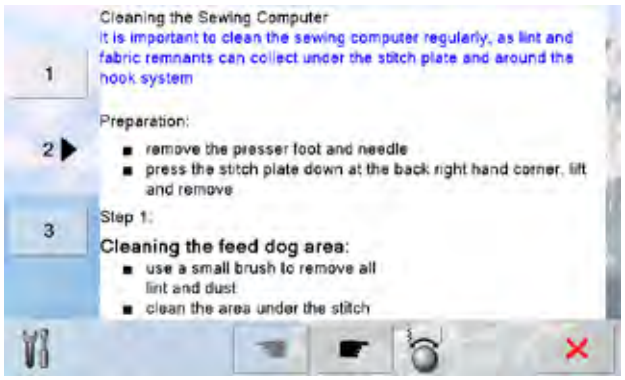

Cleaning

- clean the sewing-/embroidery computer according to the instructions
- touch field 1
- the thread catcher of the automatic thread cutter moves to the right
- carefully remove any thread remnants with the tweezers
- touch field 3
- the automatic thread cutter is re-initialized and then ready for operation

Cleaning the needle threading mechanism

- clean the needle threading mechanism according to the instructions and animation

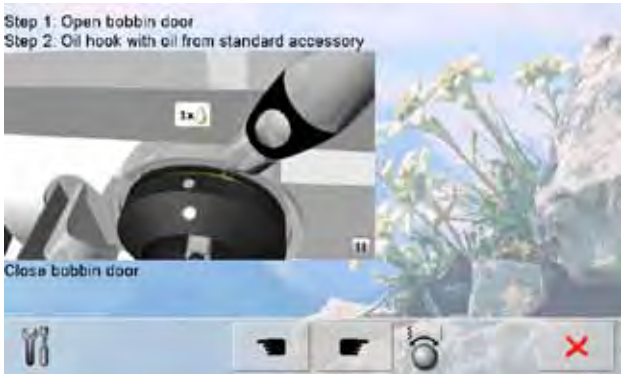

Lubricating the hook

- lubricating the hook according to the instructions and animation

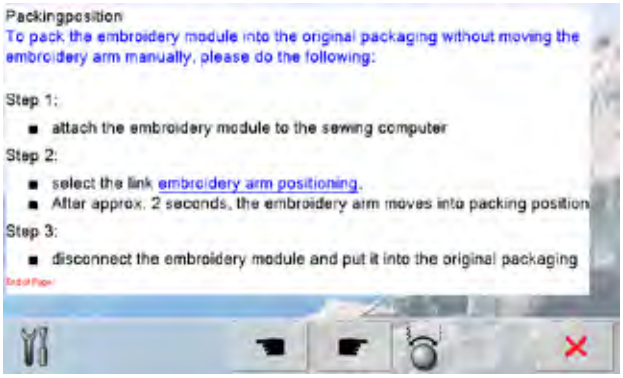

Packing position

Do not move the embroidery arm of the embroidery module by hand. Follow the on-screen instructions to fit the embroidery module back into its original packaging.

Calibrating buttonhole foot no. 3A

- attach buttonhole foot no. 3A
- press the Start-/Stop button (green) on the head frame
- the buttonhole foot will move forward and backward
- buttonhole foot will calibrate and sewing computer will indicate that the calibration has been successful
- the buttonhole foot is now set for this particular sewing computer, and should only be used with this one

Reset/Delete User Data

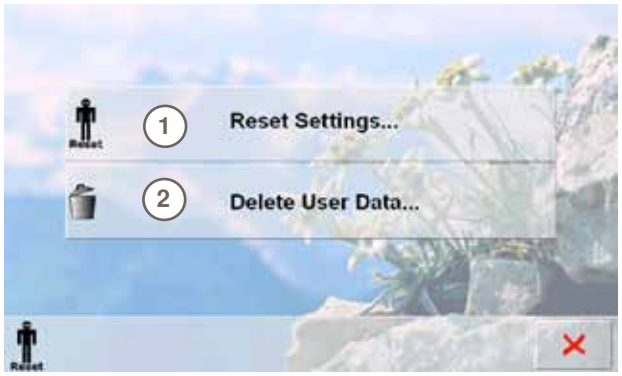

Choose from the following options by pressing the Reset button:

1 **Reset Settings**
2 **Delete User Data**

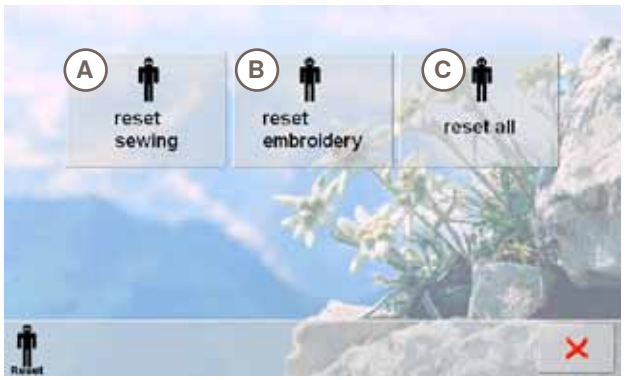

Reset Settings

Choose from the following options by pressing bar **1**:

A **Reset Sewing**
B **Reset Embroidery**
C **Reset All**

- touch the bar whose settings are to be returned to the basic settings
- confirm with ✔
- the previous screen appears
- touch ✘ until the selection menu appears

Delete User Data

Choose from the following options by pressing bar **2**:

D **Sewing «Personal Program»**
E **Embroidery «My Designs»**
F **Embroidery «Memory Stick» (the Memory Stick must be inserted in the sewing computer)**

- touch the bar that the settings are to be deleted
- confirm with ✔
- the data is deleted and the previous screen appears
- touch ✘ until the selection menu appears

Overview of Topics

The Tutorial provides information and explanations about the different areas of sewing and embroidering.

1 Threading
2 Needles
3 Presser foot
4 BERNINA Stitch Regulator (BSR)
5 Troubleshooting
6 Freehand system FHS
7 Miscellaneous
8 Embroidery
9 Buttonholes
10 Quilting
11 Techniques

- select desired topic, e.g. presser foot
- topic overview about the presser foot appears
- select desired topic, e.g. changing the presser foot

- information on the desired topic is shown
- use the stitch width or stitch length knob, the finger or the touchscreen pen to scroll through the text in the screen
- animations can be stopped or replayed by touching the icon in the bottom right corner
- touch the animation with your finger or the touchscreen pen and travel to the right or left
- the playing of the animation is controlled manually now
- touch the animation again to switch back to automatic playing mode

- use these two icons to go to the previous or next page
- touch ✕ to close the Tutorial screen
- the last active screen appears

The Creative Consultant provides information and help with various sewing techniques. After selecting the fabric and the desired sewing technique suggestions for suitable needles, presser feet etc. are displayed.
Presser foot pressure and upper thread tension are set automatically.

Fabric Types

- the most commonly used fabric types are listed in three categories
- select the desired fabric type e.g. Silk
- if the material used is not shown, select a similar fabric

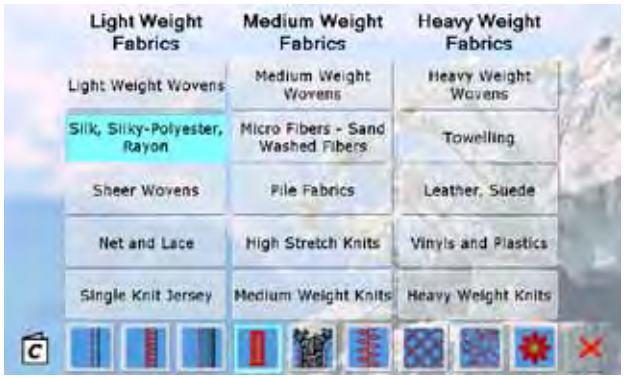

Overview of Sewing Techniques

- the possible sewing techniques appear on selecting a fabric type
  - Seams
  - Overcasting
  - Blindhem
  - Buttonholes
  - Zippers
  - Decorative stitching
  - Machine quilting
  - Free-motion stitching
  - Appliqué
- select the desired sewing technique, e.g. buttonhole
- if the desired technique cannot be found on this list, select a related technique

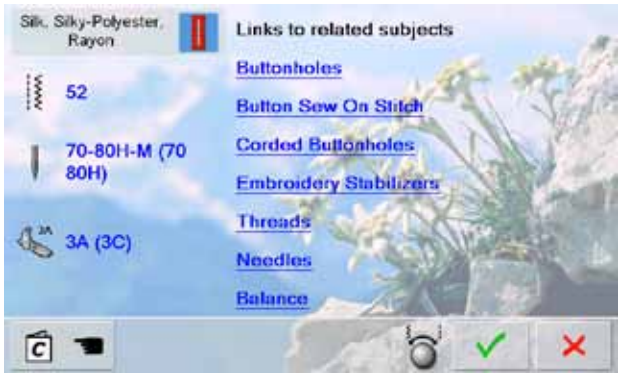

Recommendations

- recommendations for the fabric selected and the desired technique are shown
- links to the respective topics in the Tutorial are displayed
- additional information regarding engaging links for more information

- select buttonhole link
- information on buttonholes appears
- use the stitch width or stitch length knob to scroll within the text

- the Creative Consultant home screen is displayed

- select ✓ to display the screen containing the suggested stitch pattern
- select ✕ to close the Creative Consultant screen
- the last active screen appears

The Help Program contains information about individual stitch patterns and functions in the screen. No matter which screen is displayed, the help feature for stitches and functions of the screen can be opened.

- touch the «?» icon
- select the desired stitch pattern or the desired function

Stitch Pattern

This screen displays the following information:

- name of the stitch pattern
- suitable materials
- main areas of application

Functions

This screen displays the following information:

- function name
- function explanation
- main areas of application

- select ✕ to close the Help screen
- the last active screen appears

Balance Description

The sewing computer is tested and optimally set before it leaves the factory. Different fabrics, threads, stabilizers and interfacings can affect programmed stitches so that they are not sewn out properly.
These effects can be corrected with the electronic Balance so that the stitch formation can be adjusted where necessary to suit the fabric.

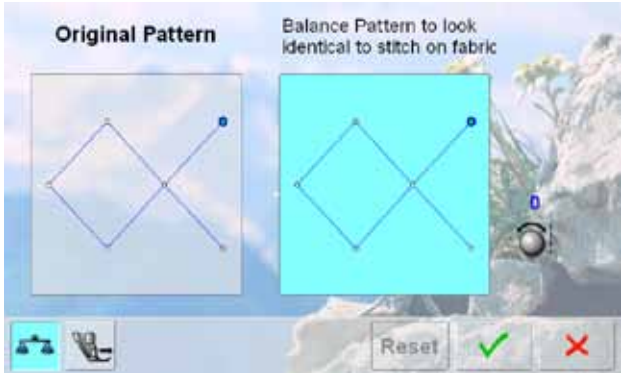

Practical and Decorative Stitches

- in the left portion of the screen the stitch pattern is displayed in its original form (as programmed)
- in the right portion of the screen the alterations made are directly visible
- the corrections can be made while sewing (with opened screen)

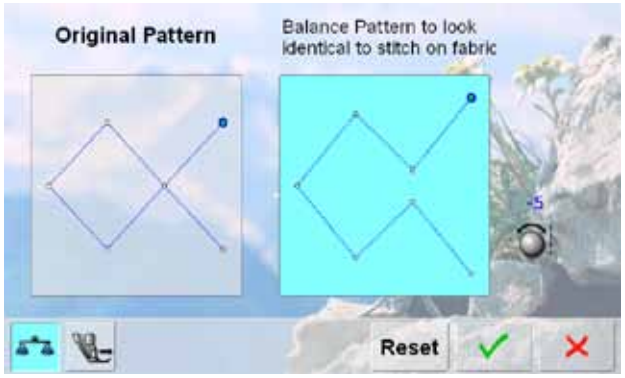

Corrections

- the stitch sewn on the fabric (e.g. the Honeycomb stitch) opens up and it does not look correct:
  - turn the stitch length knob until the stitch in the right portion of the screen is identical with the stitch on the fabric

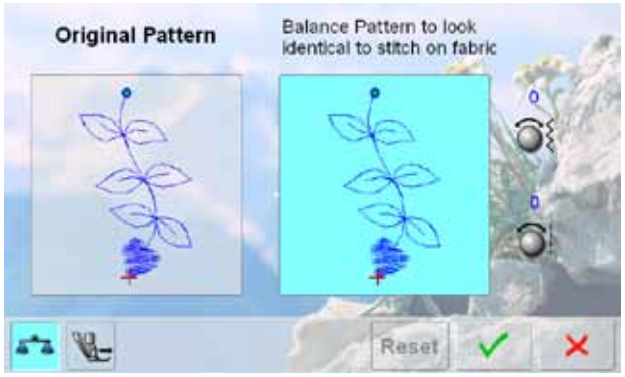

Sideways Motion Stitches

- in the left portion of the screen the stitch is displayed in its original form
- in the right portion of the screen the alterations made are directly visible
- the corrections can be made while sewing (with opened screen)

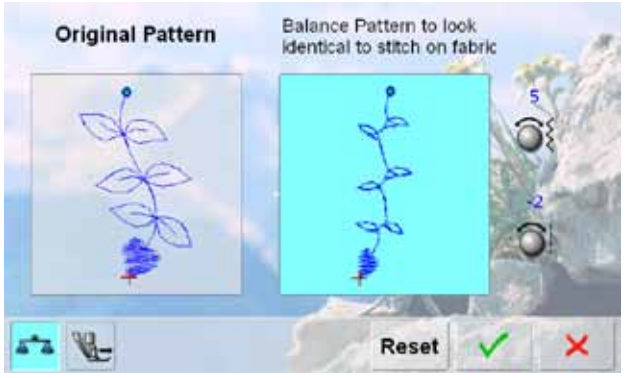

The stitch sewn on the fabric (e.g. stitch no. 809) is vertically and horizontally distorted.

Vertical Corrections

- turn the stitch length knob until the stitch on the right portion of the screen is identical with the stitch on the fabric

Horizontal Corrections

- turn the stitch width knob until the stitch on the right portion of the screen is identical with the stitch on the fabric

BERNINA Dual Feed

- standard = the fabric is evenly fed by the dual feed and the feed-dog together

Top layer of fabric is fed too slowly = «becomes» longer compared to the bottom layer

- turn the stitch width or stitch length knob clockwise to speed up the feeding of the top layer of fabric – evening out the feeding speed difference between the two layers

Top layer of fabric is fed too quickly = «becomes» shorter compared to the bottom layer

- turn the stitch width or stitch length knob counterclockwise to slacken the feeding speed of the top layer of fabric – evening out the feeding speed difference between the two layers

- changes made to the selected pattern or the dual feed are deleted
- select ✓ to save the changes and close the screen
- select ✗ to close the screen; the original settings are kept

Presser Foot Pressure Settings

Adjusting the Pressure

- the presser foot pressure scale appears on touching the «Presser Foot Pressure» icon
- turning the stitch width or stitch length knob to the left or the right decreases or increases the presser foot pressure

- with thick or multilayered fabric (e.g. when quilting) turn one of the multifunction knobs to the left to decrease the pressure (minus value)
- the presser foot is slightly raised, making it easier to move the fabric
- touch ✓ to save the setting
- touch «Reset» to reset to the basic setting

ECO Description

When work is interrupted for longer periods, the sewing-/embroidery computer can be put into energy-saving mode.

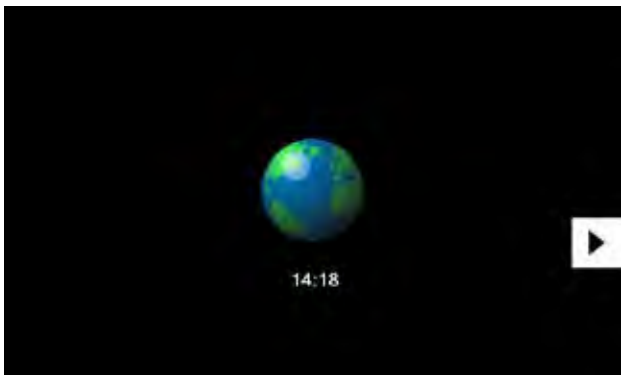

- touch the button
- screen goes dark
- power consumption is reduced and the sewing light turned off
- this mode also acts as a child safety feature
- nothing can be selected on screen (buttons are locked), and the sewing-/embroidery computer cannot be started
- touch button again = sewing-/embroidery computer is ready for use

Main Stitch Categories

Stitch Patterns 56

Selection 56
- via Screen 56
- by Stitch Number 56
- Selecting a Presser Foot 56

Customizing Stitch Patterns 57
- Altering Stitch Width and Stitch Length 57
- Altering Needle Position 57
- Securing with Quick Reverse Button on Head Frame 57
- Temporary Altered Stitch Memory 57
- For All Stitch Types and Materials 57
- Resetting to the Factory Setting 57

Practical Stitches 58

Practical Stitches Description 58

Decorative Stitches 60

Decorative Stitches Description 60

Tapering 61
- Setting 61

Combining with Functions 62
- Mirroring Decorative Stitches 62
- Long Stitch Function 62
- Pattern Extend 62
- Pattern Extend with Long Stitch 63
- Double, Triple or Wing Needle 63

Combi Mode 64
- Combining Practical and Decorative Stitches 64

Alphabets 65

Alphabets Description 65

Lettering 65

Perfect Stitch Formation 65

Combining Lettering 66
- Alphabets 66
- Correcting Combinations 66

Combining Lettering and Functions 67
- Select Lower Case 67
- Change Size 67

Monograms 68
- Monogram Sizes 68
- Balance 68

Buttonholes 69

Buttonholes Description 69

Combining with Functions 70
- Manual 5- or 7-Step Buttonhole 70

Balance 71

Automatic 72
- Direct Entry Length 72
- Button Measurement 72

Programming 73
- Automatic Buttonhole 73
- Standard and Stretch Buttonhole 73
- Round and keyhole buttonholes 73
- Hand-look buttonhole 74
- Stitch Counter Buttonhole 74
- All Buttonhole Types 74

In Long-Term Memory 75

Button Sew-On Program 75

Eyelet Program 76
- Sewing Eyelets 76
- Punching Eyelets 76

Quilt Stitches 77

Quilt Stitches Description 77

Personal Program 78

Creating a Customized Stitch Menu 78

Preparing Stitch Patterns 78
- Personal Screen 78

Altering Stitch Patterns 79

Deleting Stitch Patterns 80
- Special Screen 80

History 81

History Description 81

Long Term Memory 82

Long Term Memory Description 82

Creating Stitch Combinations 82
- Programming and Saving 82

Deleting Stitch Patterns 83
- Deleting patterns in steps 83
- Deleting a Combination 83
- Opening Empty File Drawers 83

Drawer Content at a Glance 84

Opening a Saved Stitch Combination 84

Correcting a Stitch Combination 85
- Inserting Stitch Patterns 85
- Altering a Stitch Combination 85
- Mirroring Entire Combinations 85
- Combination Subdivider 1 86
- Combination Subdivider 2 86
- Connecting Stitches 86

Deleting a Stitch Combination 87
- Overwriting 87
- Deleting 87

Selection

via Screen

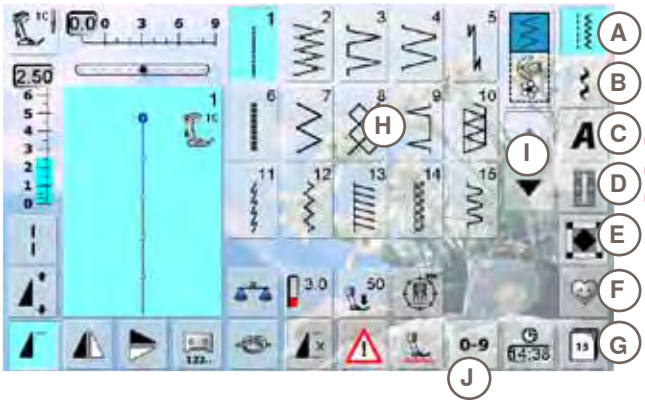

- select from main categories **A - G**
  - **A** **Practical stitches**
  - **B** **Decorative stitches**
  - **C** **Alphabets**
  - **D** **Buttonholes**
  - **E** **Quilt stitches**
  - **F** **Personal Program**
  - **G** **History**
- the available stitch patterns appear in display section **H**
- select desired stitch pattern
- scroll **I** to view all other stitch patterns of the category

by Stitch Number

Input

- select stitch pattern by entering the number after touching the icon **J**
- number keys **1** appear in display section **H**
- the selected stitch number appears **2**
- **3** to delete the previously entered number
- the entire number is deleted if you touch **2**
- confirm entry **4**

Cancel

- back to the previous screen without selecting stitch pattern **5**

An invalid stitch number will be indicated in bar **2** with 3 question marks.

Selecting a Presser Foot

- any selected stitch pattern appears together with the optimum presser foot in the stitch altering area
- attach the recommended presser foot
- touch the «Presser Foot Selection» icon top left in the screen

- in the opened presser foot category, select the icon that shows the attached presser foot, and confirm ✓. As an alternative, attach one of the options shown in the lower portion of the screen, select the respective presser foot icon and confirm ✓
- the attached presser foot appears in the «Presser Foot Selection» icon
- depending on the presser foot attached, the presser foot category may change

It is IMPORTANT to select the attached presser foot in the respective presser foot category to enable the sewing computer to recognize it and to activate the respective safety settings.

Customizing Stitch Patterns

A stitch pattern can be individually altered according to the fabric and the application. The adjustments described here are applicable for all practical and many decorative stitches.

Altering Stitch Width and Stitch Length

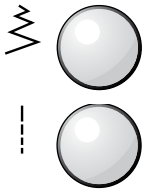

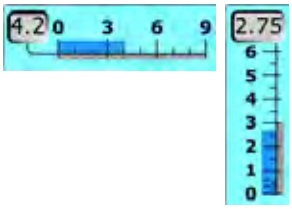

- alter stitch width and stitch length using the knobs
- stitch width and stitch length can be altered while sewing

Altering Needle Position

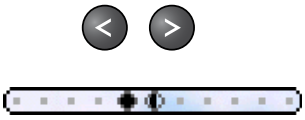

- touch the relevant button to move the needle position. To move quickly hold the button down
- 11 needle positions in total (5 left, 5 right, 1 center)
- can be altered while sewing

Securing with Quick Reverse Button on Head Frame

- secures the beginning and end of the seam
- touch the Quick Reverse button = sewing computer sews in reverse (backstepping)
- release the Quick Reverse button = sewing computer sews forwards

Temporary Altered Stitch Memory

For All Stitch Types and Materials

- altered stitch length, stitch width and needle position are automatically saved as well as functions like mirror image
- sew an altered stitch (e.g. zigzag stitch)
- select another stitch and sew (e.g. straight stitch)
- when retrieving the individually altered zigzag stitch, the alterations are retained
- the temporary altered stitch memory can contain any number of stitch patterns

The altered stitch memory can hold as many stitch alterations as needed:

- Stitch length
- Stitch width
- Needle position
- Pattern extend
- Mirror images
- Long stitch function
- Thread tension
- Balance
- Pattern repeat 1 - 9x

Resetting to the Factory Setting

- option 1: touch «clr» button
- option 2: restore stitch width and stitch length by touching the stitch width/stitch length bar (or manually by turning the knob); reset other functions manually
- option 3: switch off sewing computer

Practical Stitches Description

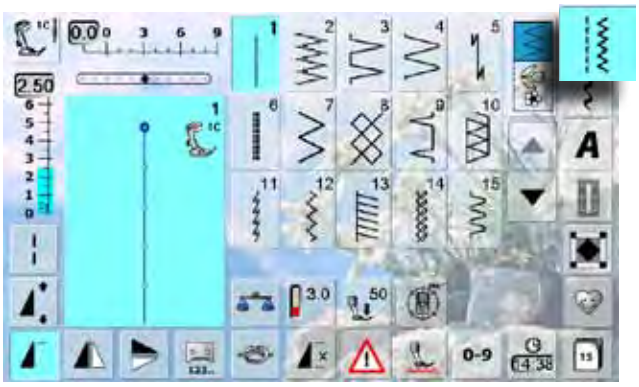

- touch the «Practical stitches» icon
- 15 practical stitches are visible in the display
- further practical stitches are visible by scrolling

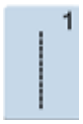

Straight stitch
For non-elastic fabric; all straight stitch work, such as seams, topstitching, sewing in a zipper

Zigzag
Zigzag work such as overcasting edges, attaching elastic and lace

Vari-Overlock
For fine jerseys, stretch overlock seams, hems and stretch seams

Running Stitch
Most types of fabric. Mending, patching, reinforcing seams, sewing over decorative threads

Securing Program
For all fabrics; secures the beginning and end of seams by straight stitching

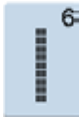

Triple Straight Stitch
Reinforced seams in firm fabrics, visible hems and seams

Triple Zig-Zag
Reinforced seams in firm fabrics, visible hems and seams, couching, decorative stitching

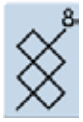

Honeycomb Stitch
Most types of interlock and smooth fabrics, visible seams, hems, linens and some types of mending

Blindstitch
For most types of fabric; blind hems; shell edging in soft jerseys and fine fabrics; decorative seams

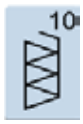

Double Overlock
For all types of knit; overlock stitch, finished edge

Super Stretch Stitch
For highly elastic fabrics. Highly elastic open seam for all types of clothing

Gathering Stitch
For most fabrics. Gathering with shirring elastic. Butted seams (edge-to-edge) and decorative stitches

Stretch Overlock
For medium weight knits, toweling and firm wovens; overlock seam, flat joining seams

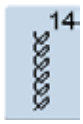

Jersey Stitch
For jersey fabrics; visible seams in lingerie, sweaters; mending jerseys

Universal Stitch
For firmer fabrics such as felt and leather; flat joining seam, visible seam, attaching elastic, decorative seam

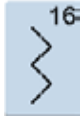

Sewn-out Zig-Zag
Oversewing woven fabrics, reinforcing edges, decorative seam

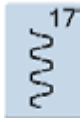

Lycra Stitch
For lycra fabrics, flat joining seams, hems, reinforcing seams on underwear

Stretch Stitch
For highly elastic fabrics, open seam for sportswear

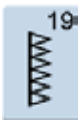

Reinforced Overlock
For medium-weight knit fabrics and jerseys, overlock seam, flat joining seam

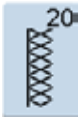

Knit Overlock
For knit fabrics, machine and hand-made items, overlock seam: sewing and finishing in one step

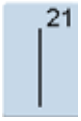

Basting Stitch
Basting seams, hems, etc. temporarily

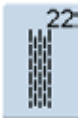

Darning Program
Automatic darning of fine to medium weight fabrics

Reinforced Darning Program
Automatic darning of firm fabrics

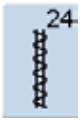

Bartack Program
Reinforcing pocket openings, belt loops etc.

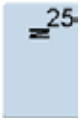

Bartack Program
Reinforcing pocket openings, belt loops, securing zippers and seam ends

Large Fly Stitch
For medium to heavy weight fabrics; reinforcing pocket openings, zippers and slits

Small fly stitch
For fine to medium weight fabrics; reinforcing pocket openings, zippers and slits

Blindstitch narrow
Blind hems on fine fabrics

Triple Straight Stitch with Long Stitch
Reinforced seams in heavy fabrics, visible seams and topstitching

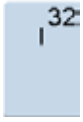

Single Straight Stitch
As a connecting stitch between two individual decorative stitch patterns. Typically used in Combi-Mode

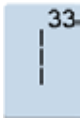

Three Single Straight Stitches
As a connecting stitch between two individual decorative stitch patterns in a combination

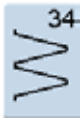

Darning Stitch
Use for darning in conjunction with the Permanent Reverse function

Decorative Stitches Description

- touch the «Decorative stitch» button
- an overview of the categories appears in the display
- touch a button and the desired category is activated
- select a stitch pattern

For sideways motion stitches the fabric is fed forwards and backwards in addition to being fed sideways

- sideways motion stitch patterns are displayed together with a «4-arrow» icon and the size in mm that appear in the top left corner of the stitch altering area

Application

Depending on the type of the fabric, simple or more complex decorative stitches should be selected to best suit the fabric

- simple decorative stitches in straight stitch design formation are particularly appropriate for light weight materials (e.g. decorative stitch no. 101)

- simple to more complex decorative stitches - programmed with triple straight stitch or with a few satin stitches - are particularly suitable for medium weight fabrics (e.g. decorative stitch no. 107)

- more complex decorative stitches - programmed with satin stitches - are well suited to heavy weight fabrics (e.g. decorative stitch no. 401)

Cat. 100 = Florals
Cat. 200 = Florals sideways motion
Cat. 300 = Cross stitches
Cat. 400 = Satin stitches
Cat. 500 = Satin stitches Sideways motion
Cat. 600 = Ornamental stitches
Cat. 700 = Heirloom stitches
Cat. 800 = Heirloom stitches Sideways motion
Cat. 900 = Novelty
Cat. 1000 = Novelty Sideways motion
Cat. 1100 = Tassel stitches
Cat. 1200 = Filigree stitches Sideways motions
Cat. 1400 = Tapering stitches
Cat. 1500 = Skyline stitches

Perfect Stitch Formation

- use the same thread weight for upper and lower threads
- for a perfect stitch formation reinforce the fabric piece on the wrong side using stabilizer
- use an additional, water-soluble stabilizer on the right side of pile or longfiber fabrics (e.g. wool, velvet etc.) which can be easily removed after sewing

Tapering

Setting

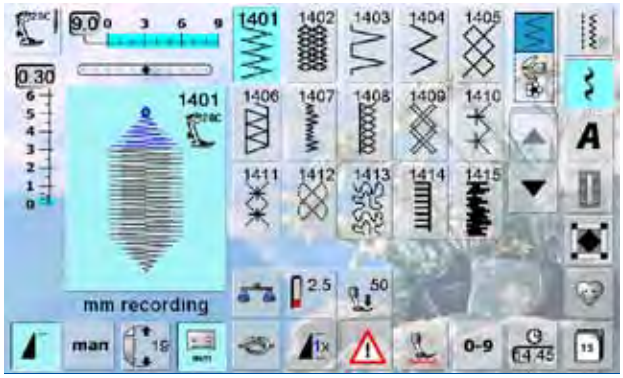

- tapering is a technique in which the stitch patterns come to a point at the beginning and end
- four different angles are pre-programmed; you can set the angle yourself on the fifth page
- select stitch no. 1401

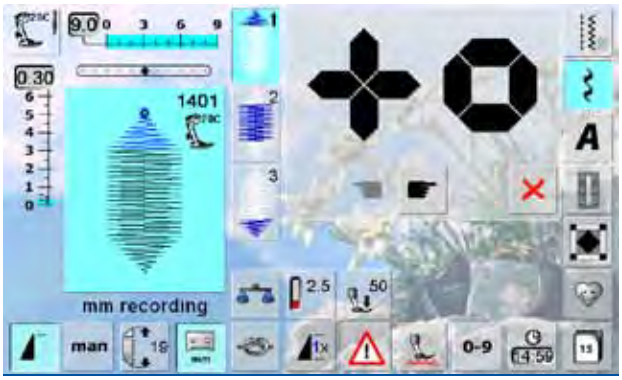

- the tapering screen appears
- the first segment (1) is active
- segment (1) and (3) have a programmed length; you can set the length of section (2) yourself

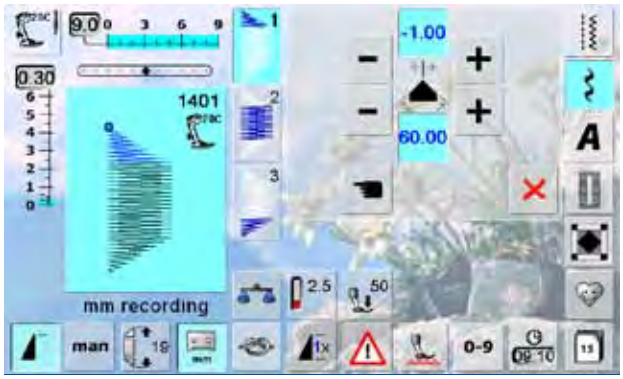

- use the top «+» and «-» buttons to move the tips of the pattern from -1.00 (far left) to 1.00 (far right)
- standard setting = -1.00
- touch the active field in the center to place the tips in the center of the pattern (0.00)
- use the bottom «+» and «-» buttons to set the angle of the tips between 0.00° and 90.00°
- standard setting = 60.00°
- touch the active field in the center to set the angle to 45.00°

Programming the Length of Section 2

- field is blue (active) when a tapering pattern is selected
- sew the first section
- use the Quick Reverse button on the head frame to set the length of section 2
- once the length is programmed, the field is turned off (inactive, gray)
- after the second section is programmed, the third section is automatically sewn and the sewing computer stops
- to program a new length, reselect the field

Programming the Length of Section 2 by Entering mm

- touch the icon
- program the length with the stitch width or stitch length knob
- sew the stitch pattern
- all three sections are automatically sewn and the sewing computer stops
- to program a new length, reselect the field

Manually Setting the Length of Section 2

- touch the icon
- sew first section
- use the Quick Reverse button on the head frame to set the length of section 2
- the third section is automatically sewn and the sewing computer stops
- the length is not programmed, and must be reset each time a new tapered pattern is started

Selecting the Tapering Angle

- touch the symbols to select another angle

Closing the Tapering Screen

- touch the icon
- the tapering screen is closed and the tapering patterns appear

Combining with Functions

Amazing effects can be created by combining decorative stitches and functions.

Mirroring Decorative Stitches

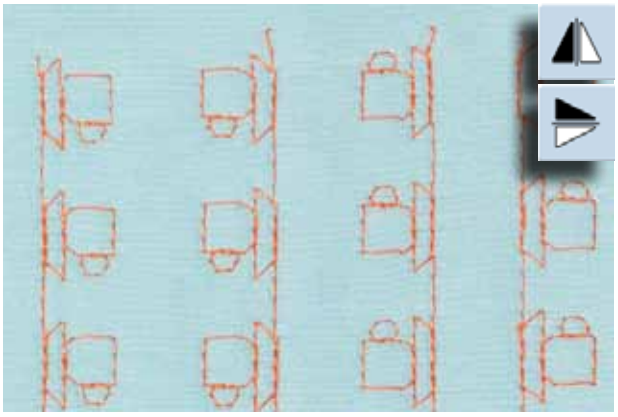

- touch Mirror Image (left/right) function
- the stitch pattern is mirrored left/right

- touch Mirror Image (up/down) function
- the stitch pattern is mirrored in the sewing direction, up/down

- touch both mirror functions simultaneously
- the stitch pattern is mirrored vertically and horizontally

Long Stitch Function

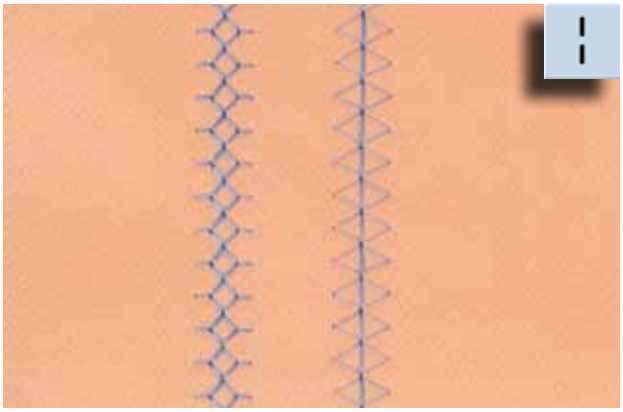

- touch Long Stitch function
- the sewing computer sews every second stitch in the stitch sequence

Pattern Extend

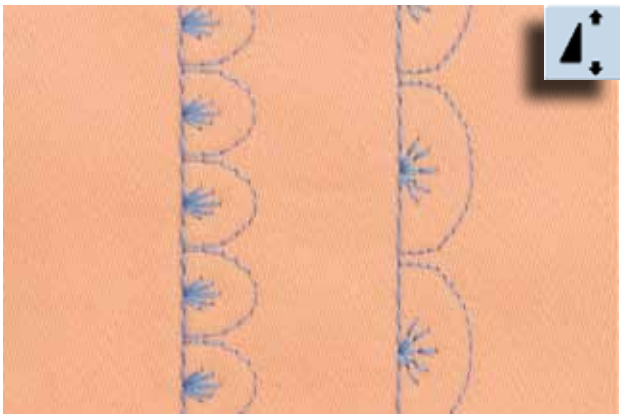

- touch the Pattern Extend function once or several times
- the stitch pattern selected is extended (i.e. stretched) 2 – 5 times, while retaining the consistency of the stitch
- some stitch patterns have a limited extension capability and cannot be extended 3 – 5 times

032299.53.04_1204_B830_EN

Pattern Extend with Long Stitch

- touch Pattern extend function one or more times
- additionally touch the Long Stitch function

Double, Triple or Wing Needle

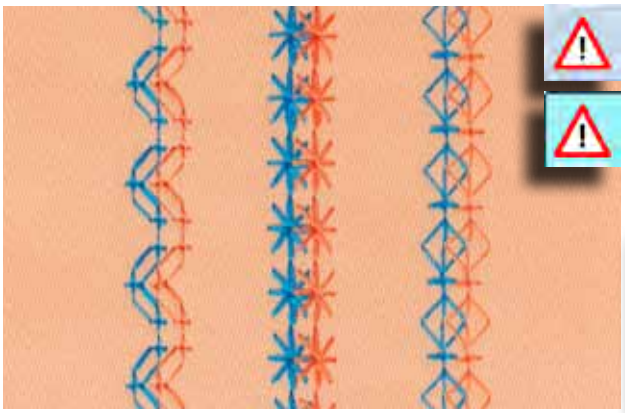

- after inserting the special needle, activate the needle limitation in the Security Program
- when selecting the stitch pattern, the stitch width is automatically limited to match the needle selected
- the best effects are achieved with simple stitch patterns

Security Program
- icon must be manually reset to deactivate
- security remains engaged after sewing computer is turned off

Combi Mode

- select Combi Mode
- Combi Mode is opened, allowing you to create pattern combinations

Combining Practical and Decorative Stitches

- select desired stitch
- the stitch appears in the Stitch Altering Area
- select next stitch
- continue in this manner until the desired combination is complete
- correcting in a combination, see page 85
- saving a combination, see page 82

Complete combination mirrored sideways
- touch the «Multifunction» icon
- touch the «Mirror image (left/right)» icon, and the entire combination is mirrored sideways

Add the Securing function
There are various options for securing stitch patterns automatically:
- touch securing function before starting to sew = pattern combination is secured at the beginning
- to program the securing function within a pattern combination = the stitch patterns are secured accordingly

Most of the practical and decorative stitches can be combined. With the exception of these special programs:

Securing programs
- No. 5, No. 1324

Basting stitch
- No. 21

Darning programs
- No. 22, No. 23

Bartacks
- No. 24, No. 25

Fly stitches
- No. 26, No. 27

Stitch programs in the buttonhole category:
- No. 51-63

Example of a Stitch Pattern Combination

- touch stitch pattern no. 407 once
- touch stitch pattern no. 607 once
- touch stitch pattern no. 446 once
- sew combination, the patterns alternate continuously

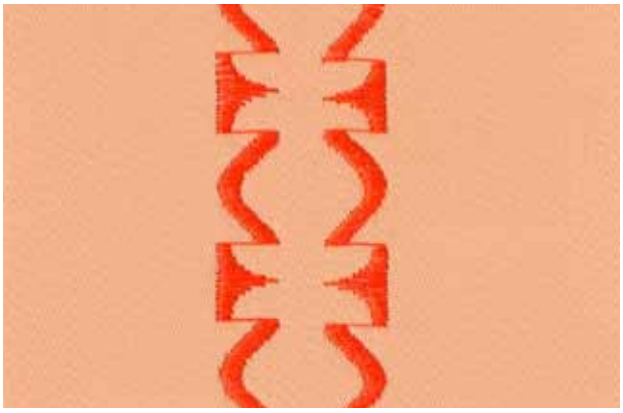

Example of a Stitch Pattern and Function Combination

- touch stitch pattern no. 427 once
- touch stitch pattern no. 402 once and activate «left/right Mirror Image» function
- sew the combination, the patterns alternate, original and mirrored

Alphabets Description

- 10 different alphabets are available
  - Block
  - Double Block
  - Script (Italics)
  - Quilting Text
  - Comic Sans
  - Monograms 30/20/15mm
  - Kyrillic
  - Hiragana
  - Katakana
  - Kanji
- each of these alphabets can be sewn in two different sizes and in lower case (except for monograms) (except Kyrillic, Hiragana, Katakana and Kanji)

Lettering

- all capital letters, numbers, punctuation marks and special characters can be viewed using the arrow icons

Perfect Stitch Formation

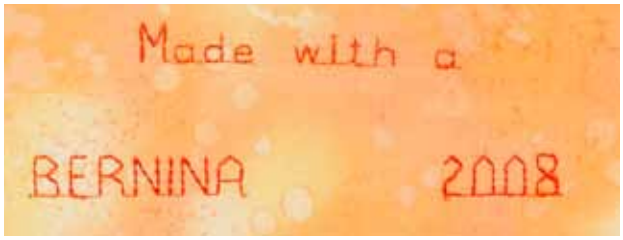

- use the same thread color for upper and lower threads
- use stabilizer on the wrong side of the fabric to reinforce sewing project
- use additional, water-soluble stabilizer on the right side of pile or longfibre fabrics (e.g. wool, velvet etc.)
- for lightweight fabrics more simple lettering types are suitable (programmed with straight stitches) such as double block letters. For heavyweight fabrics letter types with satin stitches can be used (such as monograms)

Combining Lettering

Alphabets

- individual letters and rows of the same letter of the same alphabet are sewn in Single Mode
- letters for names, addresses, words, etc. are combined and sewn in Combi Mode

Combinig Letters

- open Combi Mode
- select desired letter
- letter appears in Stitch Altering Area and on bar above Alphabet menu
- cursor is below the letter

- select next letter by touching required button
- second letter appears in Stitch Altering Area, etc.

Correcting Combinations

Inserting Letters

- a letter is always inserted above the cursor
- cursor must be scrolled up (arrow) to insert an additional letter at the beginning of lettering
- activate desired place by selecting required letter in Stitch Altering Area or scroll to it
- select new letter
- letter is inserted above cursor

Deleting Letters

- a letter is always deleted above the cursor
- activate desired place by selecting required letter in Stitch Altering Area, or scroll to it
- touch «Delete»
- letter is deleted

- saving and deleting combinations see pages 82 – 87

Combining Lettering and Functions

Select Lower Case

- touch the «Upper Case/Lower Case» icon
- the lower case «a» is highlighted in black, the lower case is activated
- touch the «Upper Case/Lower Case» icon again, the capital «A» is in black
- upper case is activated again

Change Size

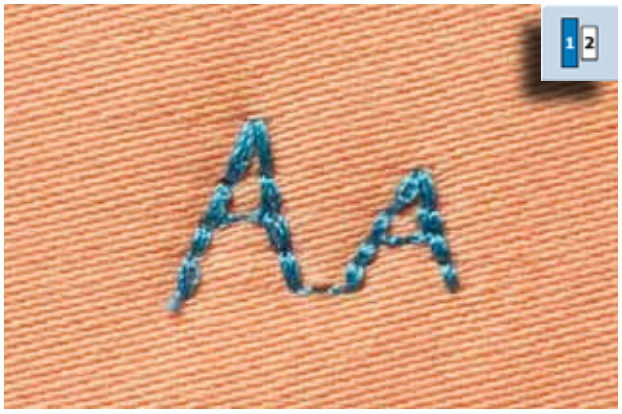

- touch the «Alphabet Size» icon; number 2 is highlighted blue
- the letter is reduced to approx. 6 mm
- touch «Alphabet Size» again; larger size is activated again (number 1 is highlighted blue)

More functions are described in the chapter «Combining Decorative Stitches with Functions», pages **62 – 63**.

Creating Combinations, see page **82.**

Monograms

- the monograms are symbolized with four arrows and the size in mm in the upper left corner in the Stitch Altering Area
- the monograms are stitched in sideways motion
- start (green dot) and end (red cross) are visible in the Stitch Altering Area

Monogram Sizes

- lettering size 1 = 30mm
- at the start of the monogram program size 1 is activated
- monograms in size 1 are individual letters = the sewing computer sews and stops automatically

- lettering size 2 = 20mm
- touch «Alphabet Size»; number 2 is highlighted
- monograms in size 2 are continuously sewn in a horizontal line

- lettering size 3 = 15mm
- touch «Alphabet Size»; number 3 is blue
- monograms in size 3 are continuously sewn in a horizontal line

Sideways-Motion Stitch Patterns, e.g. Sewing Monograms

- use the slide-on table to increase the sewing surface
- when sewing Sideways Motion stitches make sure that the fabric is fed evenly and lightly, ensuring that it cannot push against or catch on anything
- it is important to let the sewing computer sew, without pulling, pushing or holding back the fabric
- use the presser foot no. 40C

Sewing a test sample with the threads, the actual fabric and stabilizer you intend to use is recommended.

Balance

- stitch patterns may differ from the original shape depending on the fabric, stabilizer and thread quality
- with the Balance function it is possible to adjust the stitch pattern to suit the fabric used

Buttonholes Description

Buttonholes are practical closures which can also be used for decorative purposes.
All buttonholes can be sewn and programmed in different ways.

- touch the «Buttonhole» button
- an overview of the buttonholes and eyelets appears in the display
- select the desired buttonhole

51 Standard Buttonhole
For light- to mediumweight fabrics: blouses, dresses, bed linen, etc.

52 Narrow Buttonhole
For light- to medium weight fabrics: blouses, dresses, children's and baby clothes, crafts

53 Stretch Buttonhole
For all highly elastic jersey materials made from cotton, wool, silk and synthetic fibers

54 Round Buttonhole with Normal Bartack
For medium- to heavy weight fabrics of all types: dresses, jackets, coats, rainwear

55 Round Buttonhole with Horizontal Bartack
For medium- to heavy weight fabrics of all types: dresses, jackets, coats, rainwear

56 Keyhole Buttonhole with Normal Bartack
For heavy weight, non-stretch fabrics: jackets, coats, leisure wear

57 Keyhole Buttonhole with Pointed Bartack
For firmer, non-stretch fabrics: jackets, coats, leisure wear

58 Keyhole Buttonhole with Horizontal Bartack
For firm, non-stretch fabrics: jackets, coats, leisure wear

63 Heirloom Buttonhole
For light- to medium weight woven fabrics: blouses, dresses, leisure wear, bed linen

59 Straight Stitch Buttonhole
Program for staystitching buttonholes, for pocket openings, reinforcing buttonholes; especially for buttonholes in leather and imitation leather

60 Button Sew-on Program
Sewing on buttons with 2 and 4 holes

61 Eyelet with Small Zig-zag
Opening for cords and narrow ribbons/bands and decorative work

62 Straight Stitch Eyelet
Opening for cords and narrow ribbons/bands and decorative work

Combining with Functions

Manual 5- or 7-Step Buttonhole

man

- select desired buttonhole type
- touch the «man» icon = manual

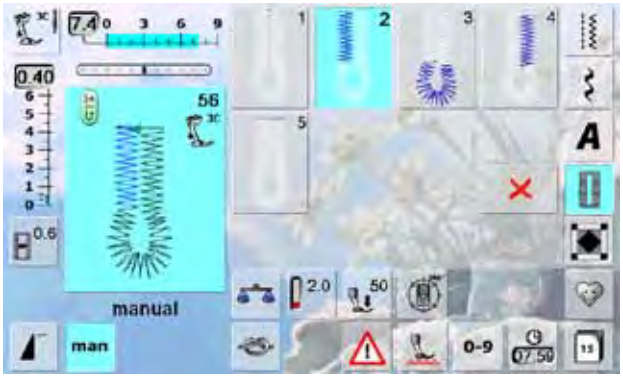

- attach foot no. 3C

Sewing 5-Step Buttonhole

- the length of the beads is determined manually while sewing
- bartack, eye and securing stitches are pre-programmed
- individual steps can also be selected by pressing the Quick Reverse button
- step «1» is activated for the beginning of the buttonhole
- at the beginning of sewing, step «2» is activated
- sew first bead
- stop sewing at the desired bead length
- touch «3»
- sewing computer sews the eye or the keyhole
- touch «4»
- sewing computer sews 2nd bead in reverse
- stop sewing at the first stitch
- touch «5»
- sewing computer sews the top bartack and secures stitches automatically

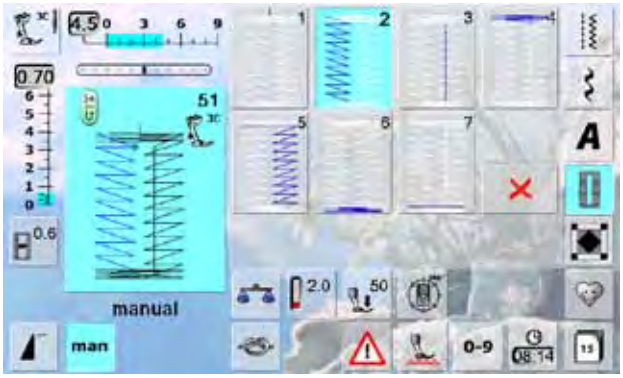

Sewing 7-Step Buttonhole

- step «1» is activated for the beginning of the buttonhole
- at the beginning of sewing, step «2» is activated
- sew first bead
- stop sewing at the desired bead length
- touch «3»
- sewing computer sews straight stitches in reverse
- stop sewing computer at the 1st stitch of the first bead
- touch «4»
- the sewing computer sews top bartack and stops automatically
- touch «5»
- sewing computer sews the second bead
- stop sewing
- touch «6»
- the sewing computer sews bottom bartack and stops automatically
- touch «7»
- sewing computer secures stitches and stops automatically

man

Leave Program

- touch ✕ or «man»
- screen reverts to original Buttonhole screen

0.6

Buttonhole Slit Width

- select buttonhole
- touch «Buttonhole Slit Width» icon
- set the cutting space width using the stitch width or stitch length knobs (0.1 - 2mm)
- larger slit width will result in narrower beads

123..

Buttonhole Stitch Counter

- select buttonhole
- touch the «Stitch Counter» icon
- when the desired length is achieved (first bead) press the Quick Reverse button
- after the length of the second bead has manually been set using the Quick Reverse button, the display changes to «auto»
- the selected buttonhole is programmed
- for making very large repeatable buttonholes

Programming Buttonhole Length

- the icon is automatically highlighted in blue (= active) when a buttonhole is selected
- buttonhole length can be set with the Quick Reverse button or the length can be programmed directly by touching the icon
- if the buttonhole is programmed the icon is inactive, gray
- if a new length is to be programmed, touch the icon again

Balance for Direct Entry Length Standard Buttonhole

- balance alterations have the same effect on both beads

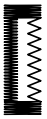

A

B

Balance for Manual Keyhole or Round Buttonhole

Balance alterations affect the two beads differently:
If left bead too dense (picture **A**):
- turn the stitch length knob counterclockwise = left bead will be longer, right bead gets shorter

If left bead not dense enough (picture **B**):
- turn stitch length knob clockwise = left bead will be shorter, right bead will be longer
- the keyhole or eye is balanced as follows:

If keyhole is distorted to the right (picture **C**):
- turn the stitch length knob clockwise

If keyhole is distorted to the left (picture **D**):
- turn the stitch length knob counterclockwise

Balance for Manual Standard Buttonhole

- balance alterations have the same effect on both beads

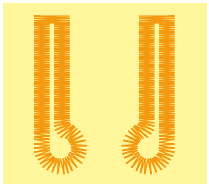

C D

Balance for Direct Entry Length Keyhole or Round Buttonhole

- balance alterations have the same effect on both beads
- the keyhole or eye is balanced as follows:
- straight stitch until the sewing computer changes to the keyhole or eye, then stop sewing
- touch the «Balance» icon and adjust the picture in the right portion of the Balance screen with the stitch length knob to match the sewn buttonhole

If keyhole is distorted to the right (picture **C**):
- turn stitch length knob counterclockwise

If keyhole is distorted to the left (picture **D**):
- turn stitch length knob clockwise
- touch ✔ and complete buttonhole

Balance for Stitch Counter Buttonhole

- balance alterations have a different effect on both beads (see picture for manual buttonhole)
- re-program the buttonhole after each alteration in balance

In all Direct Entry length and manual buttonholes each individual buttonhole sequence can be balanced separately.
In stitch counter buttonholes the balance affects both beads differently (left and right): when altering the bead the keyhole or eye are automatically altered accordingly.

Clear Balance

- touch the «Reset» icon in the special Balance screen or press the «clr» button («clr» also deletes the programmed buttonhole!)

Recommendation

- sew a test buttonhole on a piece of the original fabric

Automatic

Direct Entry Length

Entering Buttonhole Length or Button Measuring

Buttonholes can be sewn to a specific length with the Automatic Buttonhole Foot with Slide No. 3A. Buttonhole length = cutting length in mm

- select type of buttonhole
- touch the «Direct Entry Length» function

Determining Buttonhole Length

- enter the buttonhole length using the multifunction knobs (stitch width or stitch length knob)
- the length entered appears below the buttonhole
- the number above the button is the exact button size
- confirm the desired length with ✔; the screen changes automatically
- «auto» and the programmed length in mm appear on the screen

Back to Buttonhole Menu

- touch ✖ to return to the buttonhole menu; the original settings remain

Button Measurement

Determining Button Size

- the sewing computer calculates the length of the buttonhole directly from the diameter of the button
- 2 mm are automatically entered for the button thickness
- hold the button against the left side of the screen
- using the multifunction knobs, place the vertical black line flush on the right side of the button
- the button size in mm is visible above the button, between two arrows (e.g. 14mm)
- remove the button from the screen
- confirm the correct size with the ✔ icon, the screen automatically changes

Corrections for Thick Buttons

- match buttonhole length to buttonhole thickness (raised buttons, etc.) e.g. buttonhole length + 1cm (incl. 2mm) if button height is 1cm
- allow the button to pass through the buttonhole easily

Important in the event of an Error in Manipulation

- touch the «Pattern begin» icon
- the sewing computer sets the program to the start of the buttonhole again

Deleting Saved Buttonholes

- press the «clr» button or touch «recording»
- «auto» disappears and «recording» appears
- a new buttonhole length can be programmed

Programming

Automatic Buttonhole

- the length of the buttonhole is automatically measured with the buttonhole foot with slide no. 3A. The sewing computer automatically switches to the next sewing stage after reaching the maximum length
- for buttonholes of 4-31mm, depending on the buttonhole type

Both beads are sewn in the same direction.

Standard and Stretch Buttonhole

No. 51, 52, 53

Sewing First Bead

- the stitching sequence is displayed in the Stitch Altering Area
- sew the first bead forwards and stop at the required length

Programming the Buttonhole

- press the Quick Reverse button, continue sewing
- «auto» and the programmed length (in mm) appears in the display = buttonhole length is programmed

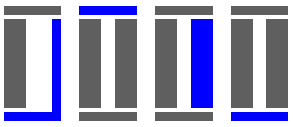

Auto Buttonhole

The sewing computer sews automatically:

- straight stitches in reverse
- first bartack
- 2nd bead forwards
- 2nd bartack
- secures stitches, stops and automatically goes to the beginning of the buttonhole

All additional buttonholes are now automatically sewn in the same length in one step.

Round and keyhole buttonholes

No. 54 - 58

Sewing Straight Stitches

- sew straight stitches forwards, stop at required length

Programming the Buttonhole

- programming is done as for the other buttonholes

Auto Buttonhole

The sewing computer sews automatically:

- round or eye part of buttonhole
- first bead in reverse
- straight stitch forwards
- second bead in reverse
- bartack
- secures stitches, stops and automatically goes to the beginning of the buttonhole

Hand-look buttonhole

No. 63

Sewing the first bead
- sew first bead forwards, stop at required length

Programming the Buttonhole
- programming is done as for the other buttonholes

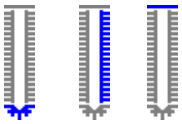

Auto Buttonhole
The sewing computer sews automatically:
- round part of buttonhole
- second bead in reverse
- bartack and securing stitches, stops and automatically goes to the beginning of the buttonhole

Double sewn keyhole buttonholes
- keyhole buttonholes can be sewn twice on thick fabrics – the first lap is stitched with a longer stitch length than the second
- do not move the fabric after sewing the first buttonhole; just tap the foot control once to sew buttonhole again

Stitch Counter Buttonhole

- attach foot no. 3C

All Buttonhole Types

Sewing the first bead
- sew first bead forwards, stop at required length

- press the Quick Reverse button on head frame

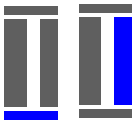

Bartack, Second Bead in Reverse
- bottom bartack and second bead are sewn in reverse
- stop sewing computer at the first stitch
- press Quick Reverse button on head frame

Bartack, Securing Stitches
- the sewing computer sews the top bartack, secures stitches and stops automatically
- «auto 1,2,3» appear on the screen
- the buttonhole is saved

Each subsequent buttonhole will be sewn identically.

- the first bead (left) is sewn forwards, the second bead (right) is sewn in reverse
- the stitch counter buttonhole cannot be saved in the long term Memory

In Long-Term Memory

Long-term saving of buttonhole programs is only possible for buttonholes originally stitched as «auto» length buttonholes.

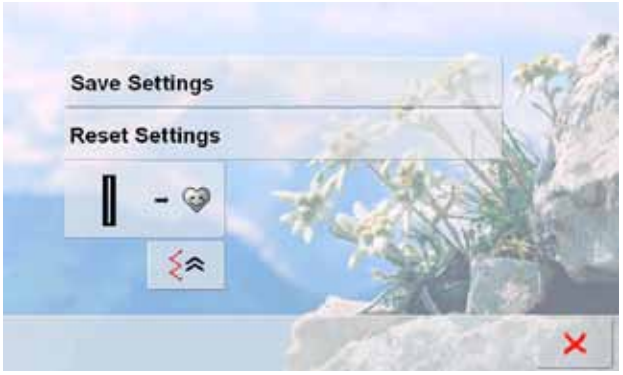

Saving Buttonhole

- touch the displayed buttonhole in the Stitch Altering Area
- touch the «Save» function – the buttonhole is saved in the Long Term Memory

Recalling Saved Buttonhole

- select the desired buttonhole type
- the length of the buttonhole appears in the «Direct Entry Length» icon
- «auto» and the length in mm appear on the screen

Changing Saved Buttonhole

- select the desired buttonhole type
- touch the «Direct Entry Length» icon
- alter the length of the saved buttonhole; confirm with ✔
- save buttonhole as described above
- the new buttonhole length overrides the existing one

Deleting Saved Buttonhole

- select desired buttonhole type
- touch the «Direct Entry Length» icon and program a new length or touch the buttonhole displayed in the Stitch Altering Area
- touch «Reset» = the saved buttonhole is deleted
- a new buttonhole length can be programmed

Button Sew-On Program

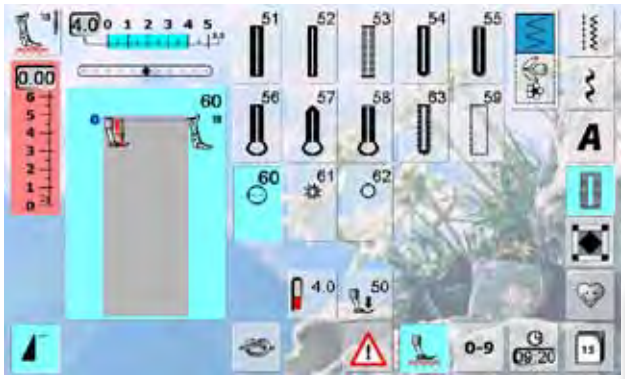

Sewing on a 2-Hole Button

- check the distance between the holes by turning the handwheel and adjust the stitch width if necessary
- hold the threads when starting to sew
- sew on the button
- the sewing computer automatically stops when program is completed and is immediately ready for the next button

If the stitch width is reduced too sharply (gray area), the sewing computer cannot be started. An animation appears.

- attach foot no. 18

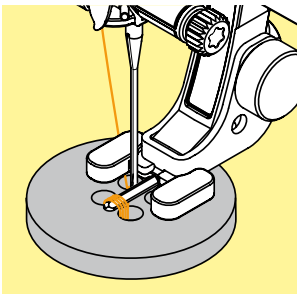

Sewing on a 4-Hole Button

- sew the front holes first
- carefully move the button forward
- sew the back holes with the same program

Start and End Threads

- the threads have already been secured and can be trimmed

For Secure Results

- pull both lower threads until the ends of the upper threads are visible on the wrong side (knot if required)
- trim threads

Sewing on Buttons
A real time-saver for projects where several buttons of the same type must be sewn on (e.g. blouse, bed linen etc.).
For work which is subject to heavy wear or washing, sew buttons on using button sew-on program twice.

2- and 4-hole-buttons can be attached. The thread shank (distance between the button and the fabric) can be set as required using foot no 18. Buttons for decorative purposes are just sewn on, without the thread shank.

Eyelet Program

- select desired eyelet:
- no. 61 = zig-zag eyelet
- no. 62 = straight stitch eyelet

Sewing Eyelets

- position fabric under the presser foot and sew
- the sewing computer stops automatically when finished and is immediately ready for the next eyelet

Punching Eyelets

- use an awl or punch to cut open the eyelet

Quilt Stitches Description

Various stitch patterns are available which are used especially in quilting, for patchwork or for appliqué:

1324 **Quilters securing program**

1325 **Quilting straight stitch**

1326 **Piecing stitch/Straight stitch**

1327 **Stippling stitch**

1328 **Handlook quilt stitch**

1329 **Blanket stitch**

1330 **Double blanket stitch**

1331 **Blind stitch**

1332 **Feather stitch**

1333 **Feather Stitch Variations**

1333 - 1338

1339 **Decorative quilt stitches**

1339 - 1345, 1351

1347 **Quilt stitch/Handlook quilt stitch variations**

1347, 1348, 1350

1352 **Blanket stitch (dual)**

1353 **Double blanket stitch (dual)**

1354 **Satin stitch**

Creating a Customized Stitch Menu

Use the Personal Program to create a file with stitches you use most for a special project.

Personal Screen

- the programmed stitch patterns are shown with pattern numbers
- when more than 15 stitches are programmed, use arrow to scroll for viewing additional stitches
- the programmed stitch patterns in this screen can be altered in the usual way

The following alterations can be saved:

- Stitch width
- Stitch length
- Needle position
- Thread tension
- Mirror Image
- Pattern extend
- Long stitch
- Balance
- Pattern repeat 1–9x

If the memory has already been filled with embroidery motifs and stitch pattern combinations, no further stitch patterns can be saved in the Personal Program. The content in the memory must first be deleted to ensure there is sufficient free space.

Preparing Stitch Patterns

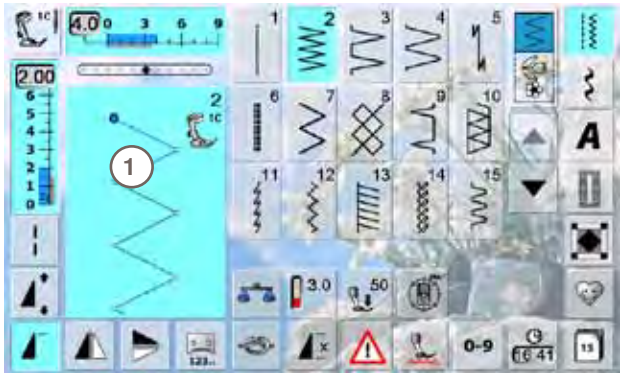

Programming of first Stitch Pattern

- select in the practical stitch screen, e.g. zigzag stitch
- make alterations
- touch the Stitch Altering Area 1 (light blue)

- the following screen appears
- touch the «Add» icon 2

- a screen with four files appears
- select the file where the stitch pattern is to be saved, e.g. 1
- each file can accommodate 100 stitch patterns in maximum

- touch the flashing «Save» Icon **3**
- the altered zigzag stitch is saved and the screen closes

- the file can be named by pressing the large gray icon **4** and the name can be typed in using the keyboard provided
- touch the «Return» icon to return to the file summary

Altering Stitch Patterns

Selecting Stitch Pattern

- alter stitch width and stitch length using the knobs
- the alterations and the basic settings are visible
- touch the Stitch Altering Area (light blue) **1**

- touch the «Save Settings» bar **2**
- all alterations are saved; the special screen closes

Deleting Stitch Patterns

Selecting Stitch Pattern

- touch the «Personal Program» icon
- the screen appears with the four files
- select the file where the stitch pattern is to be deleted, e.g. 1
- touch the Stitch Altering Area (light blue)
- touch the «Add» icon (as for programming)

- the content of the file selected is shown
- select the stitch pattern to be deleted
- the stitch pattern is deleted; all the remaining patterns are moved by one position
- close the screen with ✕

Special Screen

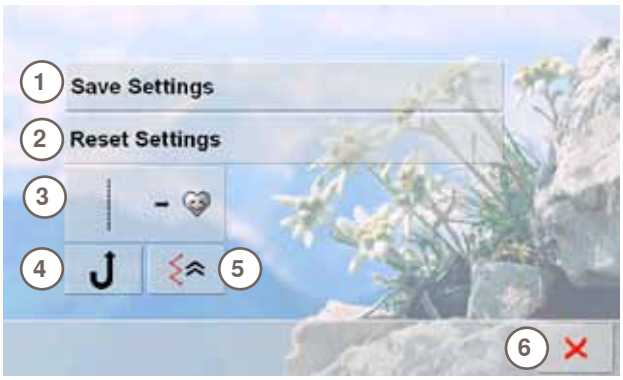

1 All alterations (stitch lengths, stitch widths, etc.) of the stitch pattern selected are saved
2 All alterations of the stitch pattern selected are reset to the original basic setting
3 Add a selected stitch pattern to your Personal Program (with possible alterations)
4 The sewing computer sews continuously in reverse
5 The stitch pattern is sewn in reverse, retracing the previously sewn stitches by the stitch
6 Close the screen

032299.53.04_1204_B830_EN

History Description

- touch the ≪History≫ icon
- the last maximum 15 sewn stitches appear
- a stitch already contained in the History screen will be overwritten when sewing restarts

Long Term Memory Description

The sewing-/embroidery computer has a memory system where both, the sewing and embroidery memories are saved.

In the sewing memory stitch patterns, lettering and numbers can be combined and saved. In the embroidery memory personal embroidery designs can be saved.

In the sewing memory each «Drawer» can store a maximum of 70 stitch patterns as long as there is sufficient free space (capacity) available. If the storage space (but not all drawers) is full, there may be too many embroidery designs in the memory.

The memory is long-term, i.e. contents are kept until they are deleted. A power cut or switching off the sewing-/embroidery computer does not have any effect on the stored contents.

Creating Stitch Combinations

Programming and Saving

- select Combi Mode
- the Stitch Altering Area and the respective function fields appear
- select the desired stitch pattern directly or type in the number
- make any necessary changes such as stitch length, stitch width, needle position and add functions such as mirroring, etc.
- select further stitch patterns

- touch the flashing «File Drawers» icon
- the «Save» icon is activated
- the System Memory Capacity is shown in percent (%) in a bar in the top right

- select the Drawer where you wish to save the stitch combination

Deleting Stitch Patterns

Deleting patterns in steps

- the stitch pattern above the cursor is deleted
- touch «Delete» as many times as required until the Stitch Altering Area is empty

Deleting a Combination

- touch the «Multifunction» icon
- touch «Delete»
- confirm with ✔

Opening Empty File Drawers

- touch the «File Drawers» icon
- Drawers screen appears
- touch «Open» in the top row
- select an empty Drawer

Drawer Content at a Glance

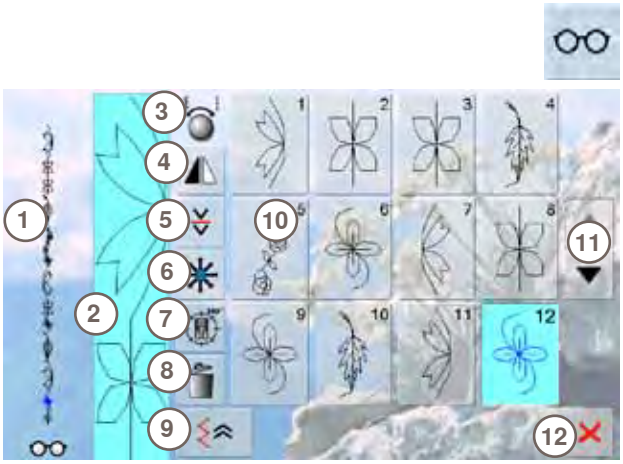

- touch the «Multifunction» icon
- in the screen the following is displayed:

1 the complete stitch combination
2 the entire length of the stitch combination can be viewed
3 turning Multifunction knobs
4 Mirror Combination
5 Combination Sub-Divider
6 Connecting stitch
7 Multi-Directional
8 Delete Combination
9 Backstepping
10 display of combination as a single motif
11 Scroll arrow
12 ✕ icon

- scroll through the combination with the arrow icons
- each stitch pattern can be directly selected e.g. for alterations
- select stitch pattern and make the alterations directly in the Stitch Altering Area
- close the screen with ✕

Opening a Saved Stitch Combination

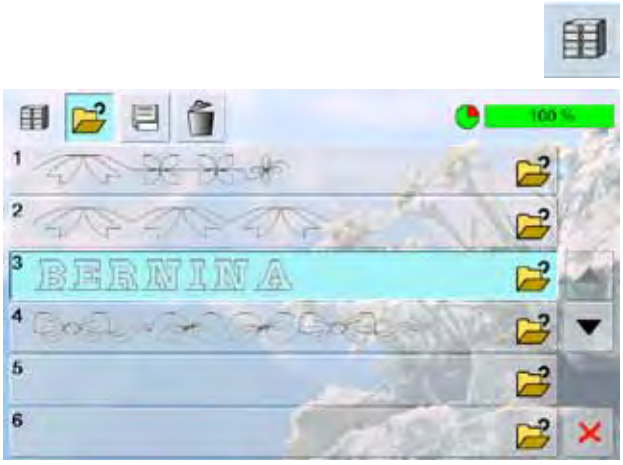

- touch the «File Drawers» icon
- a summary of the saved combinations appears
- scroll to the desired Drawer if necessary
- touch the desired Drawer
- the saved combination appears in the Stitch Altering Area

Inserting Stitch Patterns

- select the desired position in the combination
- select a new stitch pattern
- the new stitch pattern will be added after the selected stitch pattern

- to add a pattern at the beginning of a combination, the cursor must be positioned above the first pattern

Altering a Stitch Combination

- select desired stitch in the combination
- select desired function e.g. Mirroring

The alterations always affect the Stitch above the cursor that is active or light blue.

Saved stitch combinations can be altered or corrected in the same way. To make corrections and alterations permanent, the combination must be saved again afterwards.

Mirroring Entire Combinations

- touch the «Multifunction» Icon
- the screen changes
- touch the «Mirror image» icon

Combination Subdivider 1

- a combination can be subdivided into several sections with the «Subdivider 1» function
- only the section where the cursor is positioned is sewn
- to sew the next section, the cursor must be placed in the respective section

Combination Subdivider 2

- touch the «Multifunction» icon
- a combination can be split into various sections using the «Combination Subdivider 2» function
- sew the first section, the sewing-/embroidery computer stops automatically when it reaches the programmed function
- reposition the fabric, press the foot control = the next section is sewn etc.

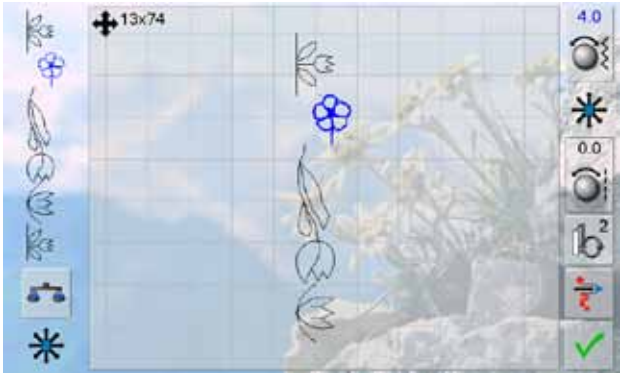

Connecting Stitches

Move single Stitch Pattern in a Combination

- touch the «Multifunction» icon
- touch «Move» icon
- touch the «Stitch selection» icon until the desired pattern is activated
- using the stitch width and stitch length knobs, the touch pen or a finger the individual stitch pattern in a combination can be moved horizontally, diagonally or vertically

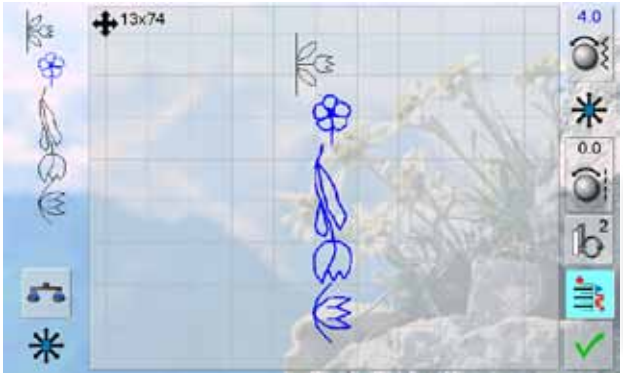

Move multiple stitch pattern of a Combination

- proceed as described in steps 1-3 above
- touch the «Move multiple stitch patterns» icon
- the active and any further stitch patterns are moved with the stitch width and stitch length knobs, the touch pen or a finger

Test-sew first on a piece of the fabric you intend to use for the sewing project.

Deleting a Stitch Combination

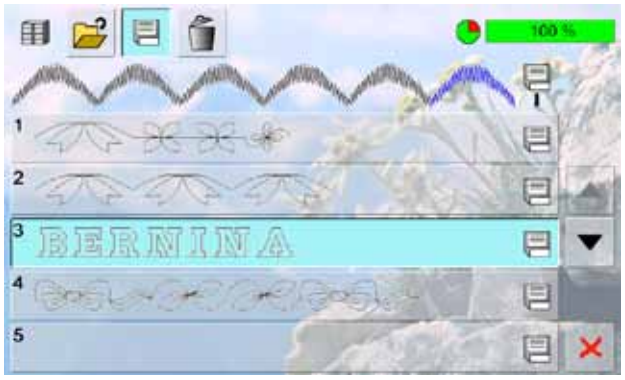

Overwriting

- program a new stitch combination
- touch the «File Drawers» icon
- select the Drawer which you want to overwrite
- confirm with ✔

Deleting

- touch the «File Drawers» icon
- a summary of the saved combinations appears
- touch the «Delete» icon
- select the Drawers to be deleted
- confirm with ✔; deleting will be stopped by touching ✕
- touch the ✕ icon – File Drawers summary closes

Impressions

BERNINA Sewing World

Practical Applications 90

Practical Stitches 90
- Straight Stitch no. 1 90
- Basting Stitch no. 21 90
- Triple Straight Stitch no. 6 91
- Securing Stitch no. 5 91

Patchwork, Appliqué, Quilting 92
- Optimal Stitch Patterns 93

Edge Finishing 94
- Narrow Edgestitching 94
- Wide Edgestitching 94
- Overcasting 95

Darning 96
- Manual - Straight Stitch no. 1 96
- Automatic - Simple Darning Program no. 22 97
- Reinforced Darning Program no. 23 97
- Reinforced Darning Program no. 34 97

Knits Neatening 98
- With Double Overlock no. 10 98

Hem 99
- Visible 99
- Jersey Stitch no. 14 99
- Blind 100

Flat Joining Seam 100
- Stretch Overlock no. 13 100

Zippers 101
- Inserting 101
- With Straight Stitch no. 1 101

Buttonhole 102

Important Information 102

Preparation 102
- Thread Tension 102
- Test Sewing 102
- Corrections 102
- Manual Buttonholes 102
- Automatic Buttonholes 102

Stabilizers and Interfacings 103

Corded Buttonholes 103
- Keyhole Buttonholes 103
- Automatic Buttonholes 103
- Corded Buttonholes With Presser Foot no. 3C 104
- Corded Buttonholes With Buttonhole Foot no. 3A 104
- Cutting Open the Buttonhole 105
- Securing the Cord 105

Decorative Applications 106

Cross Stitches 106

Bobbin-Play Sewing 107
- Free Motion Sewing 107
- Decorative Stitches 107

Sideways-Motion Stitches 108
- Monogram 108
- Decorative Stitches with Connection Stitches 109

Tapering 110

Skyline 111

Sewing in Different Directions 112

Sewing Pin Tucks 112

Quilt Techniques 113
- Quilt Labels 113
- Free Motion Quilting 113

BSR 114

BSR Description 114
- Preparation 115

Functions in the BSR mode 116
- Needle Stop Down (Default)/Up 116
- Raise or Lower the Needle 116
- Securing With the Start-Stop-Button (only Mode 1) 116
- Securing Function (only Mode 2) 116
- Free Motion Quilting (only Mode 2) 116
- Free Motion Quilting without BSR activation 116

Beeper (Acoustic Signal) Deactivation/ Activation 117
- Activating the BSR Sewing Function: 118
- Deactivating the BSR Sewing Function by using the Start - Stop - Button 118
- Holding the Work 118
- BSR Function Deactivation 118

BERNINA Dual Feed 119

BERNINA Dual Feed Description 119
- Fabrics 120
- Application 120

Practical Stitches

Straight Stitch no. 1

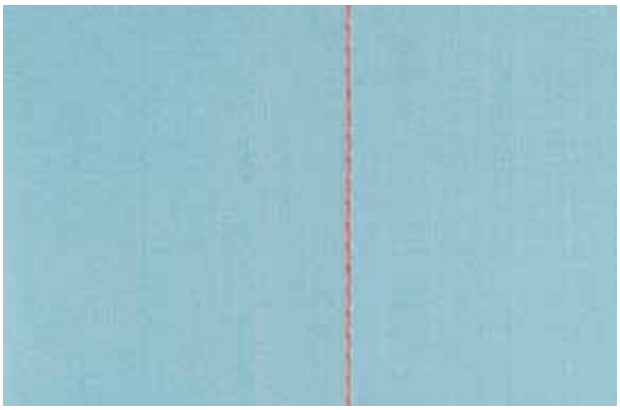

Straight Stitch

- after turning the sewing computer on, the Practical Stitch screen with the activated straight stitch appears
- for specialty work, program the seam length using the stitch counter function, see page 34

Application

- suitable presser foot to be selected according to the technique, e.g. manual darning
- suitable for all fabrics

- Reverse pattern foot no. 1C/1D

Adjust the stitch length to suit the fabric
For example, use a longer stitch length (approximately 3 - 4mm) with denim, a shorter length (2 - 2.5mm) with batiste.

Adjust the stitch length to suit the thread
For example, use a longer stitch length (approximately 3 - 5mm) when using cordonnet thread for topstitching.

Activate Needle Stop Down
Prevents the fabric from slipping when you stop to adjust or pivot project.

Basting Stitch no. 21

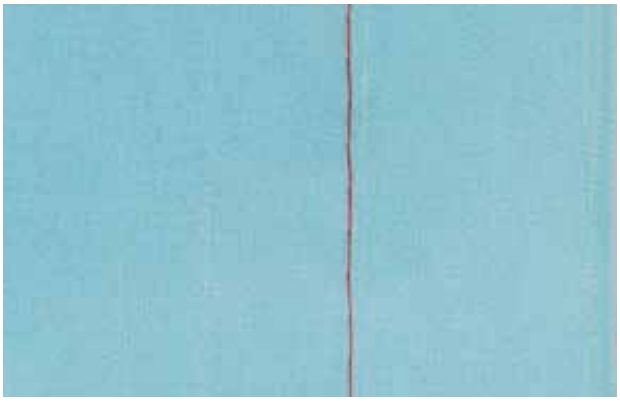

Basting Stitch

- straight stitch, sews out every fourth stitch, i.e. longest stitch possible is 24mm when the stitch length is set at 6mm. Recommended stitch length is 3.5 - 6mm
- for all work where a very long stitch is required
- quick and easy basting of seams, hems, quilts, etc.
- easy to remove

Preparation

- pin work horizontally to basting direction to prevent the layers slipping

- Reverse pattern foot no. 1C/1D

Securing/fixing the thread
- sew a few basting stitches at the beginning and end of a seam

Basting
- use a fine darning thread for basting as it is easier to remove

Triple Straight Stitch no. 6

Open Seam

- durable seam for firm and densely woven fabrics such as denim and corduroy
- reinforced seam subjected to hard wear
- durable seam for high stress areas such as children's clothing

- Reverse pattern foot no. 1C
- Jeans foot no. 8

For heavy layers or very densely woven fabrics:
A Jeans needle and Jeans foot no. 8 will help when sewing very heavy fabrics such as denim or canvas.

Decorative top stitch
Lengthen stitch and use as a decorative top stitch with denim.

Securing Stitch no. 5

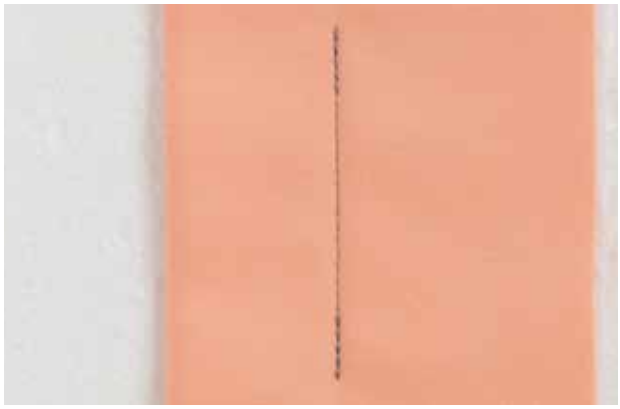

Straight Stitch With Securing

- for all fabrics
- secures beginning and end of seam

Beginning the Seam

- the sewing computer secures the seam automatically (5 stitches forward, 5 stitches reverse)
- the sewing computer continues straight stitching forwards

Ending the Seam

- when coming to the end of the seam, press and release the Quick Reverse button on head frame. The sewing computer will then secure the seam automatically (5 stitches reverse, 5 stitches forward)
- sewing computer stops automatically when securing is completed

Seaming or sewing long seams

- quicker securing at beginning and end of seam
- even securing by defined stitch count

- Reverse pattern foot no. 1C

Patchwork, Appliqué, Quilting

Accuracy is essential when sewing patches together. The side edges of the Patchwork foot are exactly 1/4“ (6mm) from the center needle position. The center indents on either side of the foot indicate the needle insertion point and the two additional indents are 1/4” (6mm) in front of and behind the needle. When sewing at a foot’s width, the seam allowances will always be the exact width and it is easy to turn the work while maintaining the same width.

- Patchwork foot no. 37/37D (optional accessory)
- Patchwork foot no. 57/57D (optional accessory)
- Reverse pattern foot no. 1C

Optimal Stitch Patterns

for patchwork no. 37D/57D

- no. 1 Straight stitch (stitch length 1.5 - 2mm)
- no. 1326 Straight stitch

It is not necessary to secure the stitches for these relatively short seam lengths. Attach the slide-on table for precise and easier work.

for appliqué no. 1C/20C

- no. 1354 Satin stitch
- no. 1329, 1330, 1352, 1353 Blanket stitch
- no. 1331 Blind stitch

for quilting no. 1C

- no. 1324 Quilters securing program
- no. 1325 Quilting/straight stitch
- no. 1328, 1347 – 1350 Quilt stitch/hand-look quilt stitch
- no. 1327, 1331 – 1345, 1351 Decorative quilt stitch
- Free Motion quilting with or without BSR

Edge Finishing

Narrow Edgestitching

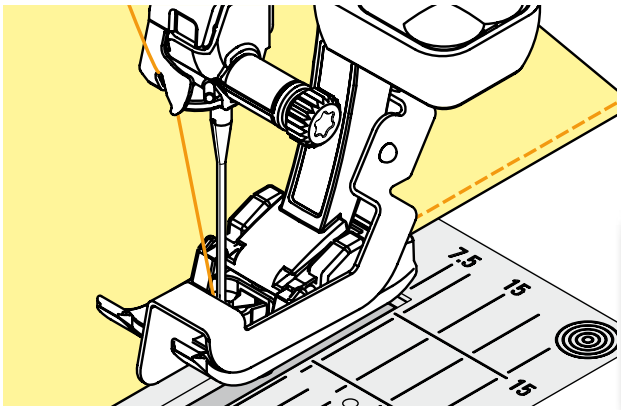

Outer Edges

- place edge of fold against the guide on the Blindstitch foot
- select needle position at desired distance from the folded edge

- foot no. 5:
  use any left or far right needle position
- foot no. 1C and no. 10/10C/10D:
  any needle position is possible

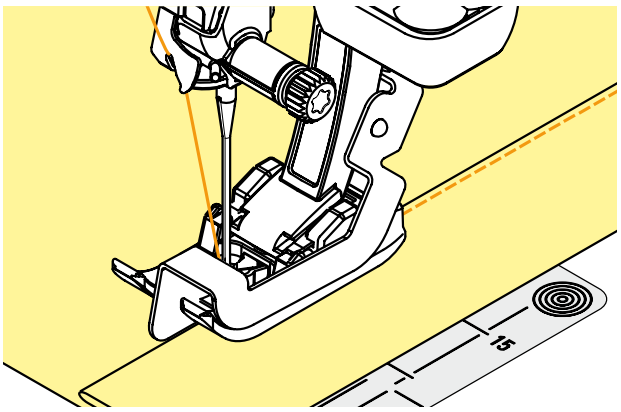

Hem Edges

- place edge of fold against the guide on the Blindstitch foot (inside upper edge of hem)
- select needle position to the right to sew along the upper edge

- Reverse pattern foot no. 1C
- Blindstitch foot no. 5
- Edge stitch foot no. 10/10C/10D (optional accessory)

Wide Edgestitching

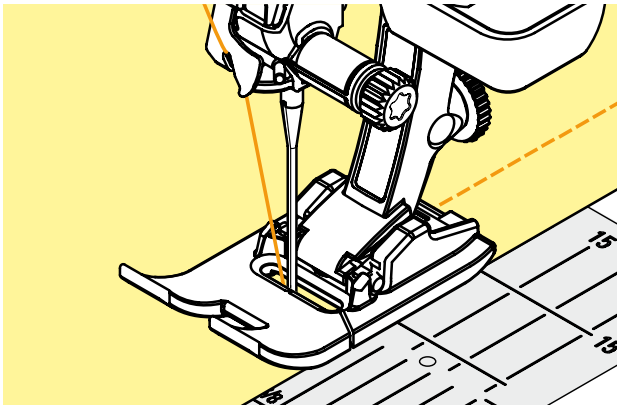

There are three options for wide edge stitching

- guide the folded edge along the edge of the presser foot
- guide the folded edge along the marks on the stitch plate (for stitching 3/8” to 1” from the edge (1 to 2.5cm)

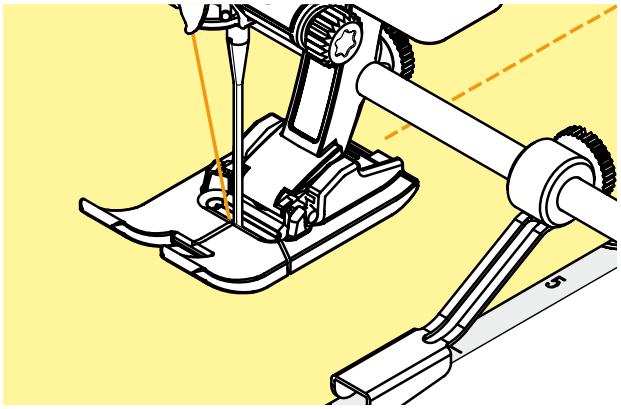

- insert the adjustable seam guide into the hole on the back of the presser foot shaft
- adjust as desired
- tighten the screw
- guide the folded edge along the seam guide
- to sew parallel wider lines, guide the seam guide along a previously sewn line of stitches

Overcasting

With Zig-Zag Stitch no. 2

- guide edge of fabric into the center of the presser foot
- do not select too wide a width or too long a stitch – the edge should lie flat and not roll
- needle goes into fabric on one side and over the edge into the air on the other side
- use a fine darning thread for lightweight fabric

Satin Stitch

- dense stitch used for appliqué, embroidery, etc.
- shorten stitch length, satin stitch setting will be indicated by parallel lines on stitch length bar

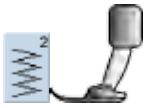

- Reverse pattern foot no. 1C

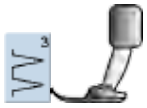

If edges roll:

- use the Vari-overlock stitch and foot no. 2A

The sewing computer has a programmed satin stitch: no. 1354

Darning

Manual - Straight Stitch no. 1

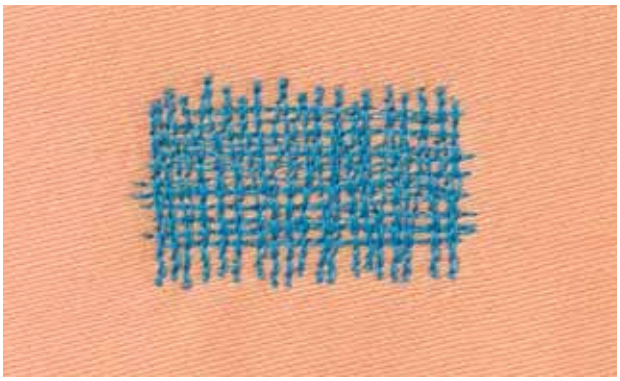

Darning Holes or Worn Areas

Preparation

- lower the feed-dog
- attach the Slide-on table
- hoop the fabric into the darning hoop (optional accessory). The darning area stays evenly taut and cannot be distorted

Sewing

- work from left to right without using pressure
- when changing direction on top and on bottom, move in curves (avoid points as this prevents holes and thread breakage)
- work in different lengths so that the thread is better spread over the fabric

- Darning foot no. 9

1 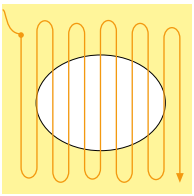

Stitch Over the Hole 1

- sew the first rows to cover the hole (not too close, sewing beyond the worn area)
- work the rows in irregular lengths
- turn work by a quarter turn - 90°

2 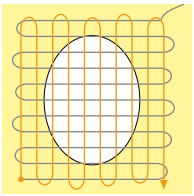

Cover the First Rows 2

- sew over the first rows - not too close for a soft finish
- turn work by a half turn - 180°

3 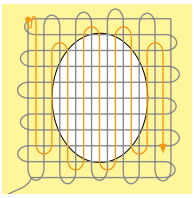

Complete Darning 3

- sew loosely and in same direction as 2nd rows

Poor stitch formation

- if the thread is lying on the right side of the fabric, the hoop is being moved too quickly
- if there are knots on the wrong side of the fabric, the hoop is being moved too slowly

Thread breaks

If thread breakage is a problem, it could be that the hoop is not being moved smoothly.

Automatic - Simple Darning Program no. 22

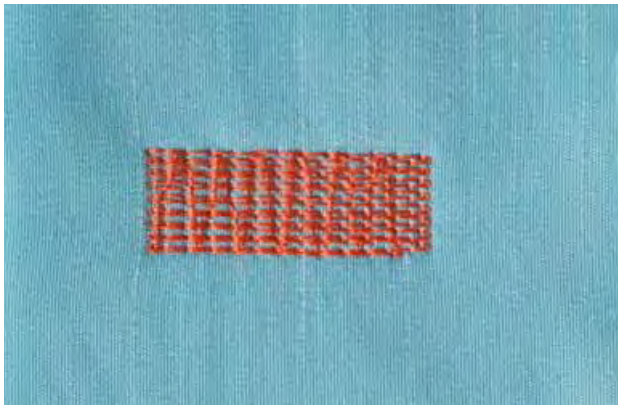

Replaces threads along the lengthwise grain in all fabrics.

Preparation

- place a piece of lightweight stabilizer under the worn area before darning if necessary

Sewing

- sew the first row and stop
- press and release the Quick Reverse button at the desired length; this programs the first length
- continue sewing; the sewing computer stops automatically

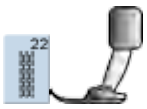

- Reverse pattern foot no. 1C
- Automatic buttonhole foot no. 3A

If the darning becomes distorted
Correct with the Balance function see page **51**.

Reinforced Darning Program no. 23

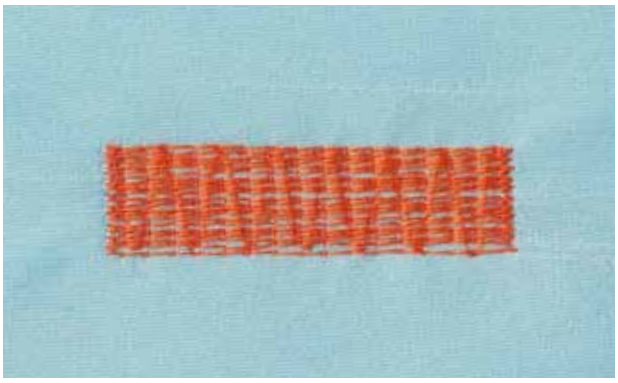

Replaces threads along the lengthwise and crosswise grains in all fabrics.

Preparation

- place a piece of lightweight stabilizer under the worn area before darning if necessary

Sewing

- insert the needle in the top left of the worn area
- sew the first vertical row
- press and release the Quick Reverse button at the desired length; this programs the length needed
- continue sewing; the sewing computer stops automatically when finished

- Automatic buttonhole foot no. 3A

If the darning does not cover the whole worn or damaged area
Reposition the work under the foot to continue covering the worn or damaged area. Begin sewing; the program will repeat as often as desired (the length is saved).

Reinforced Darning Program no. 34

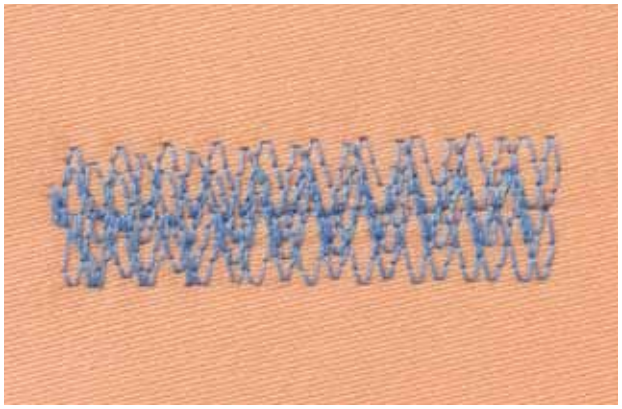

The Darning Program no. 34 is particularly useful for mending heavy weight or durable garments, such as jeans and overalls.

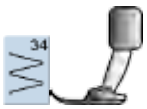

- Reverse pattern foot no. 1C

Knits Neatening

With Double Overlock no. 10

Closed Seam

- overlock seam in loose knits and cross seams in knits and jerseys

Sewing

- sew the overlock seam along the raw edge

- Reverse pattern foot no. 1C
- Overlock foot no. 2A

Knits and jersey

- use a new ball point needle to prevent damaging the loops

Sewing stretch fabrics

- if necessary use a stretch needle (130/705H-S) = needle point slides between the fibers

Hem

Visible

Jersey Stitch no. 14

Stretch Hem

- for all types of cotton, wool, synthetic and mixed fiber jerseys

Preparation

- fold hem, pin if necessary

Sewing

- sew hem at preferred depth on the right side of fabric
- trim excess fabric (wrong side)

- Reverse pattern foot no. 1C/1D

Blind

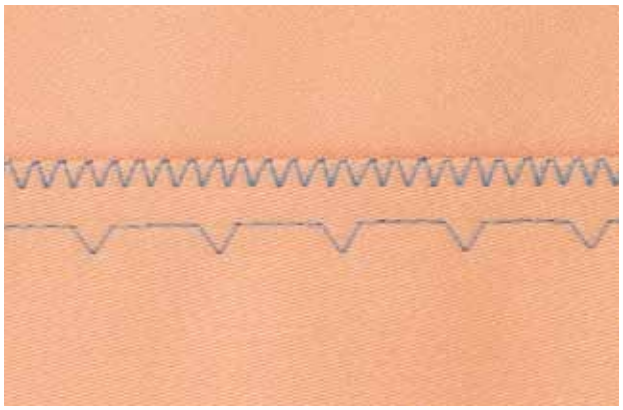

wide

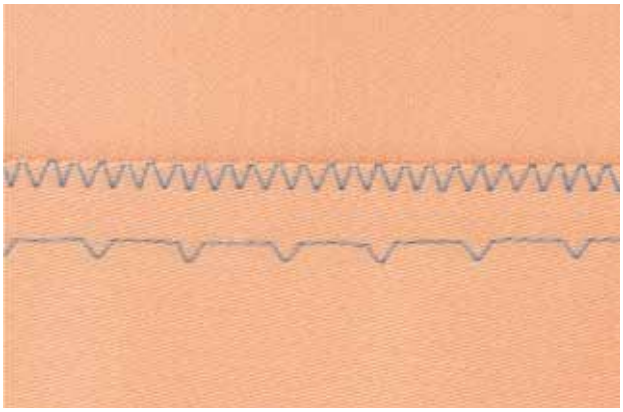

narrow

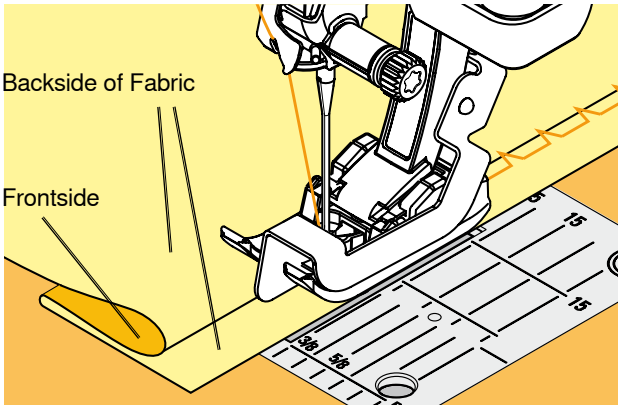

Blindstitch Wide no. 9

- for medium weight to heavy fabric

Blindstitch Narrow no. 29

- for fine fabrics (small stitches are visible on the right side = decorative effect)

Preparation

- finish the raw edges as desired
- fold the hem and baste or pin in place
- fold the garment back over the right side of the fabric to expose the finished lower edge (see drawing)
- place the work under the presser foot with the guide positioned against the folded back fabric

Sewing

- the needle should just pierce the edge of the fold
- after sewing about 4" (10cm), check both sides of fabric and adjust the stitch width if necessary

- Blindstitch foot no. 5

Flat Joining Seam

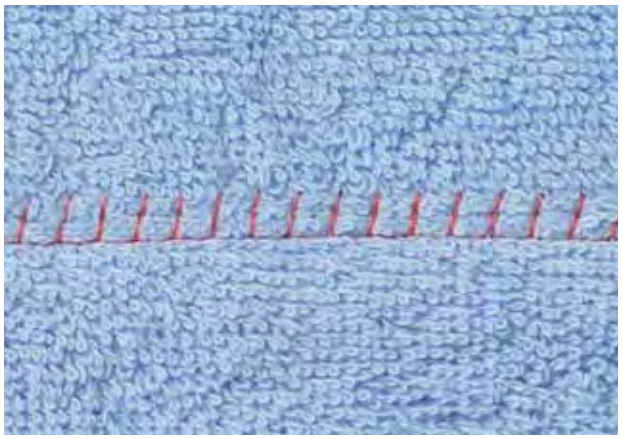

Stretch Overlock no. 13

- ideal for fluffy, thick materials such as terry cloth, felt and leather

Sewing

- fabric edges are overlapped and the stitch is placed on the seam allowance which produces a very flat, durable seam
- sew stretch overlock along the fabric edge
- the stitch should sew over the edge of the top layer of fabric on the right swing of the needle

- Reverse pattern foot no. 1C

Zippers

Inserting

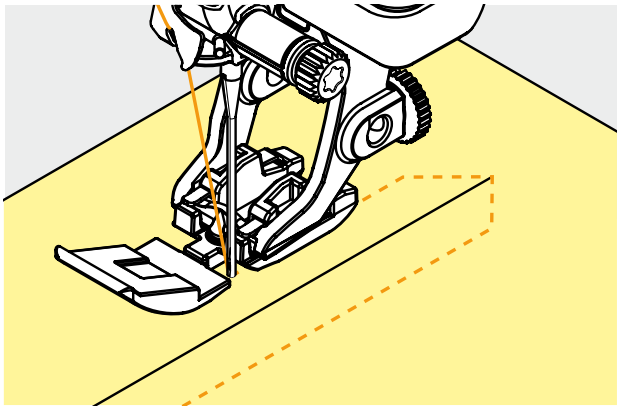

Preparation

- select the icon showing the attached presser foot in the presser foot selection (refer to p. 56)
- baste seam closed and clean finish the seam allowance
- baste or pin zipper in place so that fabric folded edges meet over the center of the zipper

With Straight Stitch no. 1

- open zipper a little
- start sewing from top left
- position the foot so the needle stitches along the edge of the zipper coils
- stop in front of the pull (needle position down), raise the presser foot and close zipper again
- continue to sew to the base of the zipper (needle position down)
- turn fabric and sew across the seam (needle position down)
- turn fabric again and sew second side of the zipper from bottom to top

- Zipper foot no. 4D
- Zipper foot with guide no. 14 (optional accessory)

Variation:

Sew both sides of Zipper from bottom to top

- suitable for all fabrics with nap or grain (e.g. velvet)
- prepare zipper as described above
- start sewing in the seam of the zipper end and sew first side from bottom to top
- sew the second side the same way from bottom to top

Zipper as a decorative element

- sew a visible zipper into the fabric as a decorative element

To sew around the zipper pull

- close the zipper and sew up to about 2” (5cm) away from the pull
- stop with the needle down in the fabric, raise the presser foot. Open zipper, pulling the tab below the needle; lower presser foot and continue to sew

Starting to sew

- hold threads firmly when starting to sew and pull the fabric gently behind the needle for a few stitches

Zipper tape or firm fabric

- for even stitch formation use a size 90 - 100 needle

Important Information

If a buttonhole is to be sewn at right angles to a seam, we recommend the use of the height compensation plates for buttonholes (available as optional accessory).
Using the compensation plate is recommended when sewing buttonholes in difficult fabrics. It can be used with the Automatic buttonhole foot no. 3A or the buttonhole foot 3B.

Thread Tension

- the tension is set automatically when a buttonhole is selected
- the upper tension is slightly looser than normal
- this gives a slightly rounded appearance to the beads, making the buttonhole more attractive
- cord reinforces buttonholes and enhances their appearance
- sew both beads at the same speed

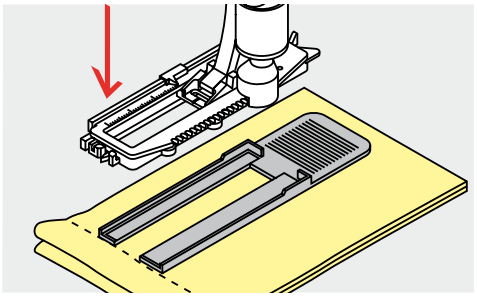

Test Sewing

- always sew a test sample on the fabric with stabilizer you intend to use
- select the buttonhole type you intend to use
- sew the buttonhole in the same direction on the fabric (with or against the grain)
- cut the buttonhole open
- push the button through
- adjust the buttonhole length if necessary

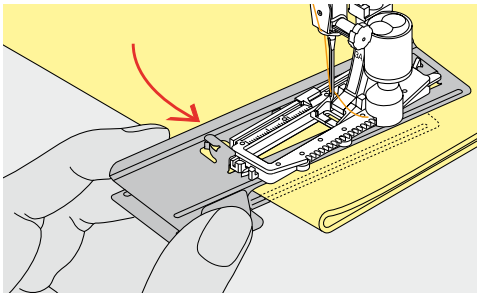

Corrections

To Adjust the Bead Width

- alter the stitch width

Altering the Stitch Length

- any alterations to the stitch length affect both beads (more dense or less dense)
- always reprogram the buttonhole after any changes to the stitch length

Preparation

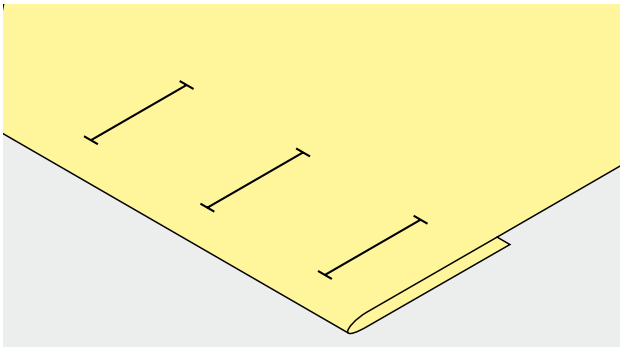

Manual Buttonholes

- mark the buttonhole length in the desired position
- use Buttonhole foot no. 3C

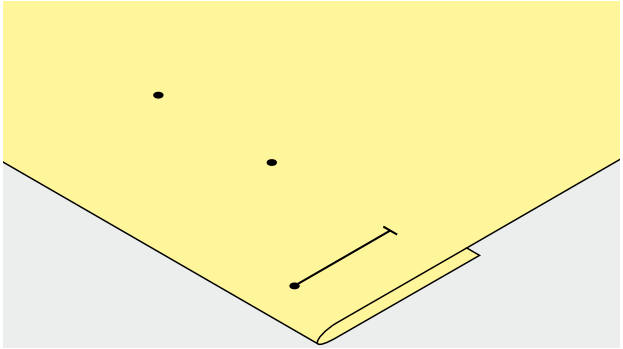

Automatic Buttonholes

- mark the length of just one buttonhole
- after sewing the first buttonhole, the length for all subsequent buttonholes is automatically programmed
- mark only the beginning of all subsequent buttonholes
- use Automatic buttonhole foot no. 3A

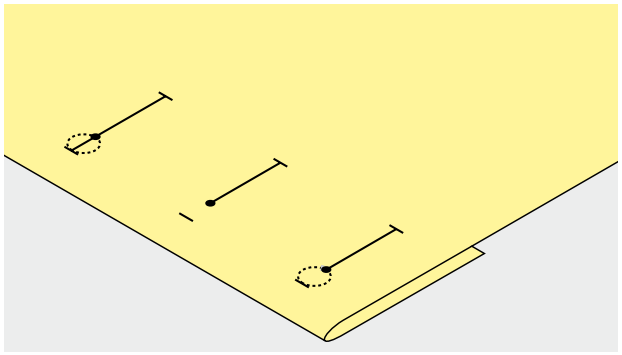

Keyhole Buttonholes

- mark the bead length only
- the correct eye length will be added when the buttonhole is sewn

Stabilizers and Interfacings

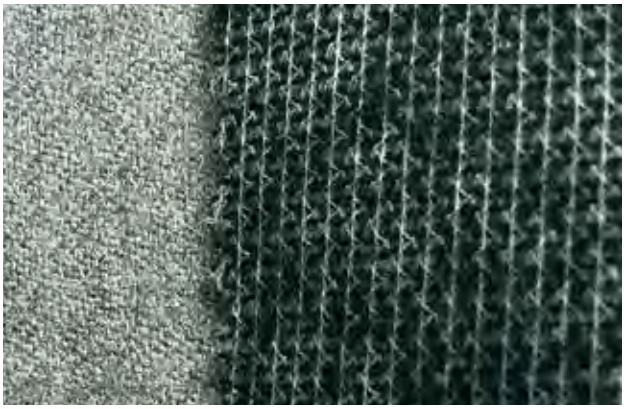

Automatic Buttonholes

- interfacing helps with stability and with the buttonhole durability
- select the interfacing to suit the fabric type

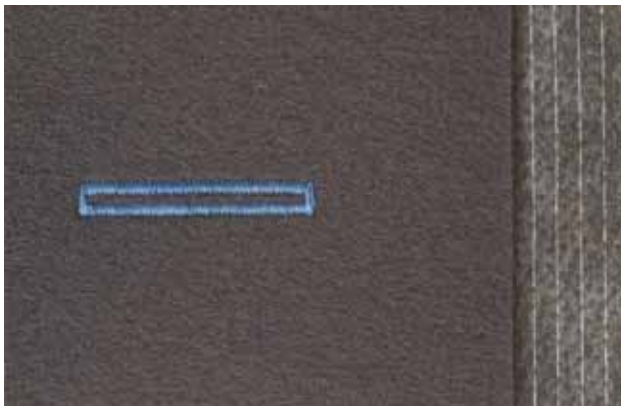

- for thick and fluffy fabrics an embroidery stabilizer can be used. The fabric feeds better

Corded Buttonholes

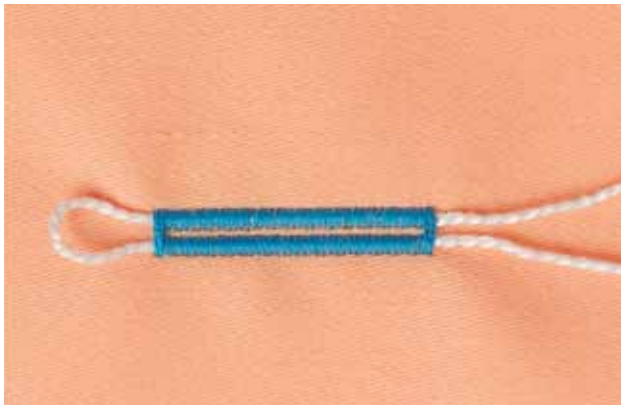

General

- cord reinforces and enhances the appearance of buttonholes with raised beads
- the loop of the cord should be at the end of the buttonhole most subject to wear = where the button rests
- position the work accordingly

Ideal Cords

- perle cotton no. 8
- strong hand-sewing thread
- fine crochet yarn

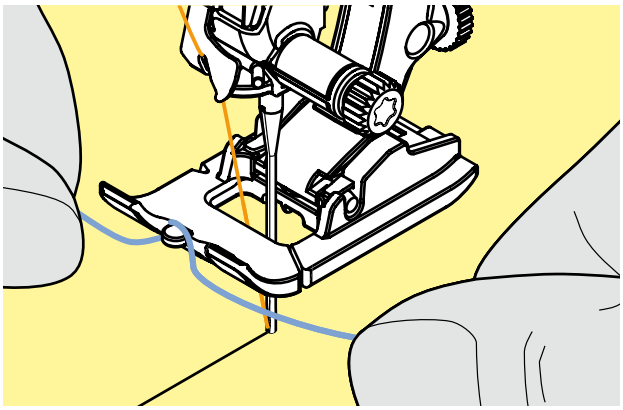

Corded Buttonholes With Presser Foot no. 3C

- insert the needle at the beginning of the buttonhole
- raise the presser foot
- hook the cord over the center pin on the front of the foot

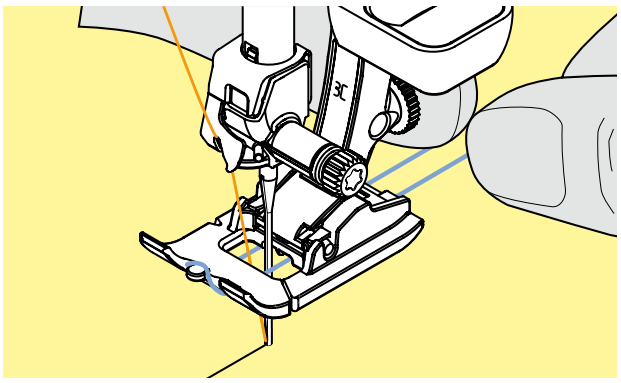

- place both ends of the cord in the grooves on the sole of the foot and pull them to the back
- lower the presser foot

Sewing

- sew the buttonhole in the usual manner, do not hold the cord tightly
- the buttonhole will form over the cord, covering it

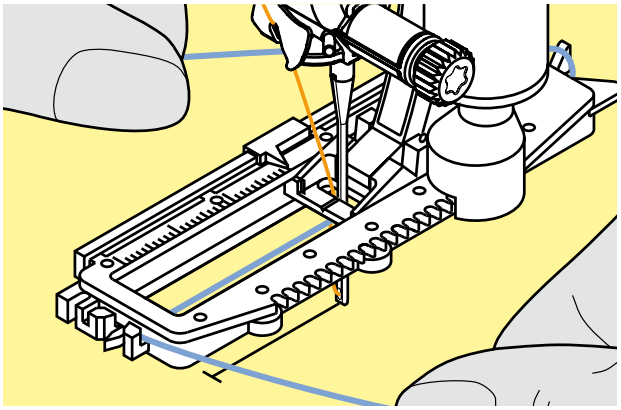

Corded Buttonholes With Buttonhole Foot no. 3A

- insert the needle at the beginning of the buttonhole
- raise the presser foot
- guide the cord under the foot to the right
- hook the cord over the pin at the back of the foot

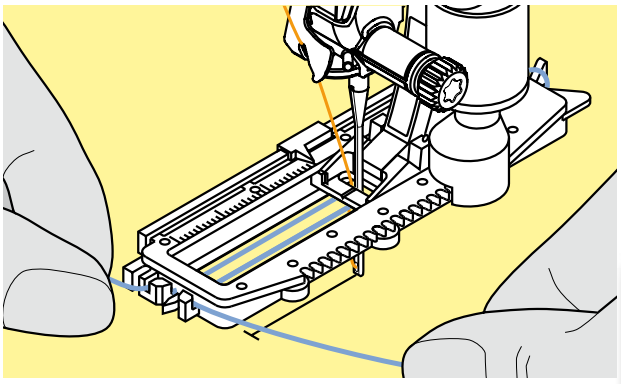

- bring the cords to the front of the foot
- pull them into the slit

Sewing

- sew the buttonhole in the usual manner, do not hold the cord tightly
- the buttonhole will form over the cord, covering it

Narrowing bead width could affect coverage of cording.

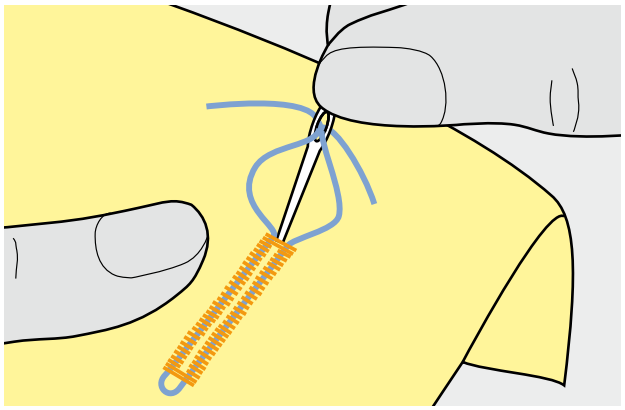

Securing the Cord

- pull the cord through the buttonhole until the loop disappears into the end of it
- pull the ends of the cord through to wrong side of the fabric
- knot or secure with stitches

Cutting Open the Buttonhole

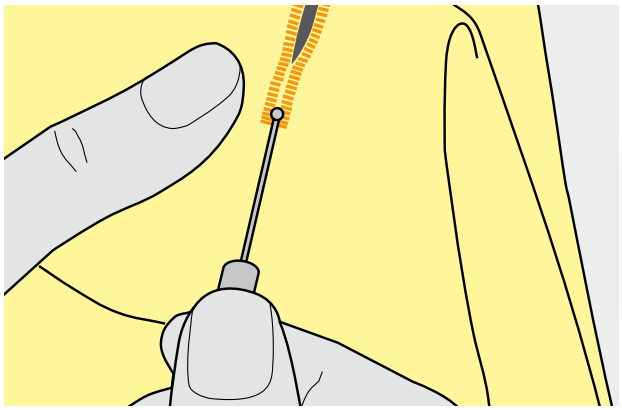

Seam Ripper

- using the seam ripper, cut from the ends towards the middle

In order not to cut the ends of short buttonholes by mistake, place a pin at the end of the buttonhole for additional security.

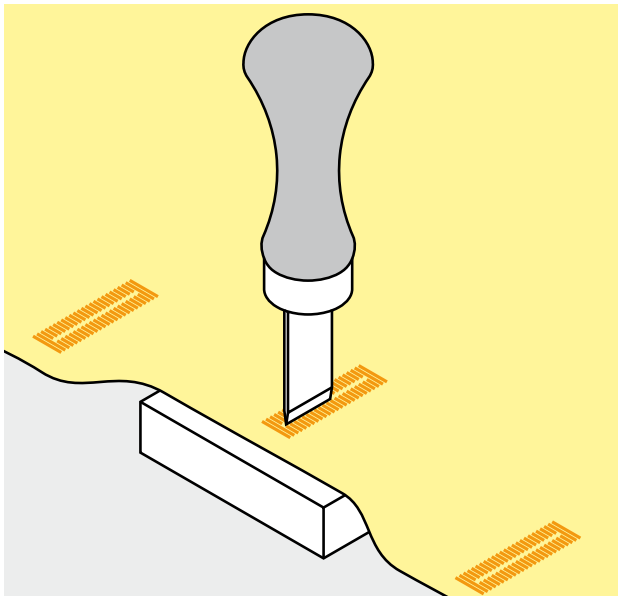

Buttonhole Cutter and Block (Special Accessory)

- place the fabric on the wood block
- place the cutter in the center of the buttonhole
- press down on the cutter with your hand or a hammer

Cross Stitches

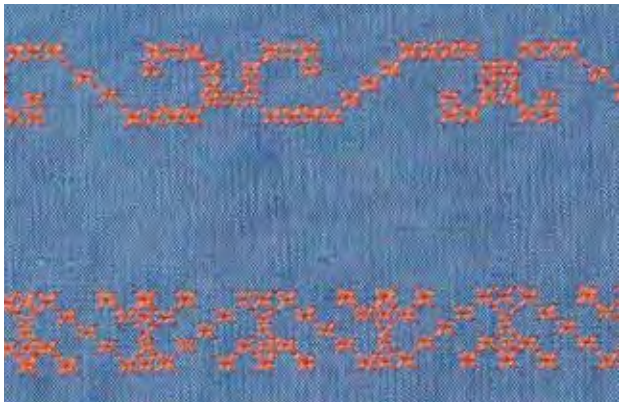

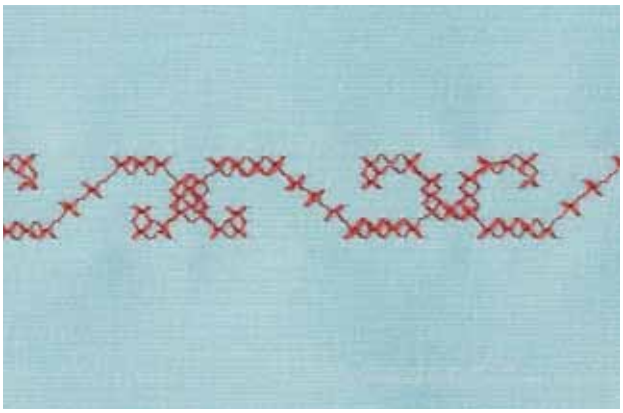

- cross stitching is a traditional technique, and extends the range of decorative stitches
- if the cross stitches are sewn on fabric with a linen texture, they acquire a hand-stitched effect and look like hand-stitched cross stitching

Application

- for home furnishings
- for trimmings on garments
- for embellishing in general

Sewing

- cross stitches of Category 300 can be stitched and combined like any other decorative stitches

Sewing Trims

- select cross stitch
- stitch a row, using the seam guide or slide-on table seam guide
- it is important to stitch the first row in a straight line, as it will serve as a reference for the rows that follow
- select a new stitch
- stitch a second row next to first at a distance of one presser foot's width, or using the seam guide
- repeat for the following rows of stitching

Use cotton embroidery thread for cross stitching
Stitch appears fuller.

- Reverse pattern foot no. 1C/1D or
- Open embroidery foot no. 20C/20D

Bobbin-Play Sewing

Free Motion Sewing

The bobbin can be filled with different thread, ribbons or cords, e.g. perle yarn and metallic threads, narrow satin ribbon, elastic threads and wool threads for free-motion stitching to add texture. This method is similar to “normal” free-motion sewing, but is done on the wrong side of the fabric.

Depending on thread thickness, use the tool contained in the accessories to loosen the lower-thread tension (see page 25). Very thick thread must be wound onto the bobbin by hand (clockwise), then drawn through the hole in the hook with the threader (in accessories).

Reduce the winding speed to wind decorative threads on the bobbin.

Reinforce the area to be sewn with embroidery stabilizer. The design can be drawn on the wrong side of the fabric. You can also draw the design on the front of the fabric, then follow the lines with a freely guided straight stitch and polyester, cotton or rayon thread. The rows of stitching are visible on the right side of the fabric, and serve as reference lines for the bobbin-thread sewing.

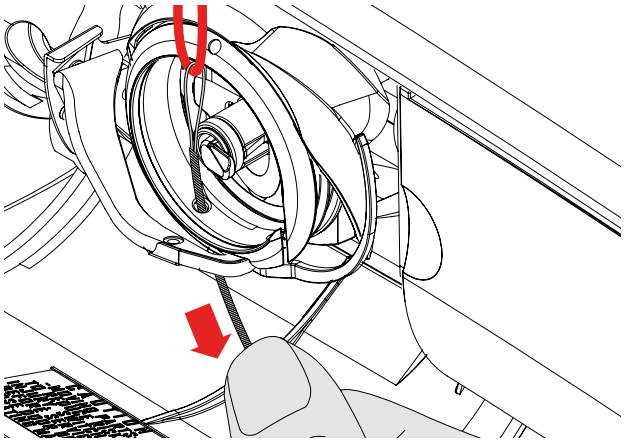

The BSR function can be used for bobbin-thread sewing. Guide your project at uniform speed evenly under the needle, follow the lines of the design, and fill shapes as wished. Remove the stabilizer after you finish sewing.

Sew a sample first to check what the result looks like on the wrong side of the fabric. Alter the lower-thread or upper-thread tension if required.

Decorative Stitches

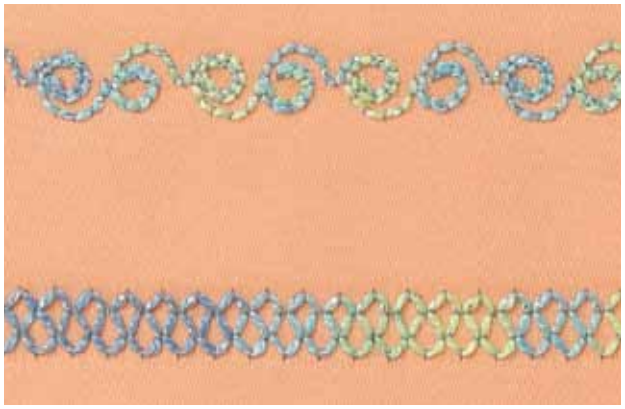

The bobbin can be filled with different threads or ribbons, e.g. perle yarn and metallic threads, narrow satin ribbon, elastic threads and wool threads for bobbin-play sewing with decorative stitches.

Not all decorative stitches are suitable for this technique. Avoid compact stitch types and satin stitches.

Open embroidery foot no. 20C or 20D is ideal for this technique.

- adjust stitch length and width settings (widen, lengthen) so that nice results are also achieved when sewing with thicker threads
- the long-stitch function produces another decorative effect

Sideways-Motion Stitches

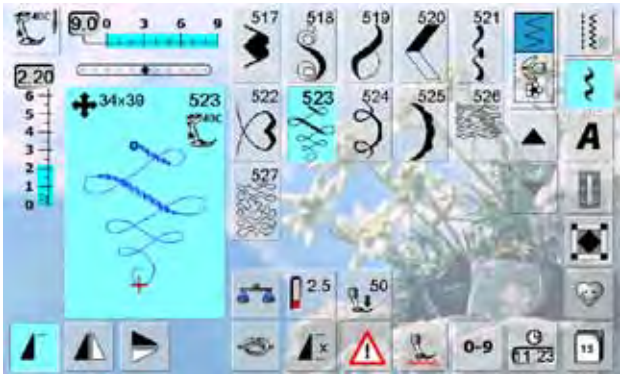

- Sideways-motion patterns are large patterns in which the feed dog not only feeds the fabric forwards and backwards, but also sideways
- Sideways-motion patterns are indicated with four arrows, and their size is given in mm in the Stitch Altering Area
- start (green dot) and end (red cross) are visible in the Stitch-Alterating Area

Sewing Sideways-Motion Stitch Patterns

- use the slide-on table to increase your sewing surface
- when sewing, make sure that the fabric is guided evenly and gently, without bumping into anything or getting caught
- it is important to let the sewing computer sew without pulling, pushing or holding the fabric back
- before beginning to sew, mark a line that will serve as an aid for parallel guiding while you sew

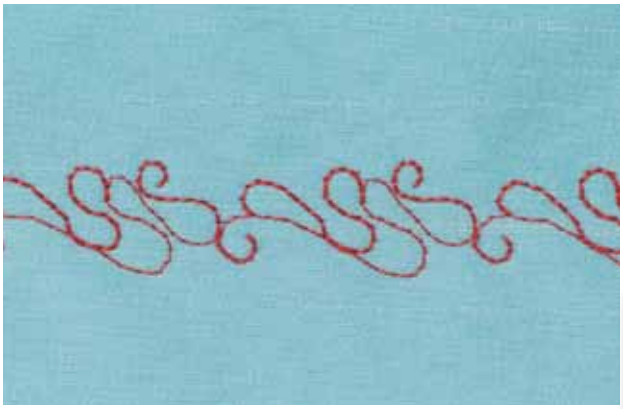

Sideways-Motion Stitch Patterns and Functions

- most Sideways-motion stitch patterns can be combined with all functions that are active on the screen (e.g. mirroring)
- many Sideways-motion stitch patterns cannot be altered in terms of size (recognizable by different color of stitch length and width display)

Sample
It always pays to sew a sample with the actually used thread, fabric and the stabilizer of the project!

Monogram

With Connection Stitches

- Monogram initials can be assembled and connection stitches added for special effects

Decorative Stitches with Connection Stitches

Use the connection stitches in Combi mode to create special stitch pattern combinations.

- select stitch pattern no. 518 in Combi mode and touch the «Mirror Image (Left/Right)» function
- select stitch pattern again
- select the «Multifunction» button
- select the «Connecting Stitches» function

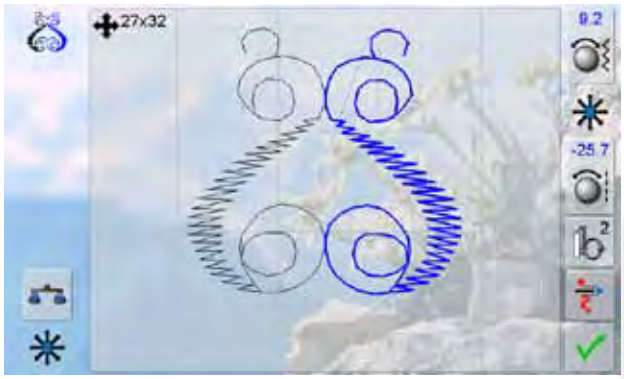

- position the stitch patterns using the knobs, the touch pen or your finger
- touch the «Embroidery Mode» function
- the pattern is stored in the «My Designs» folder and can be embroidered combined with any of the possible functions

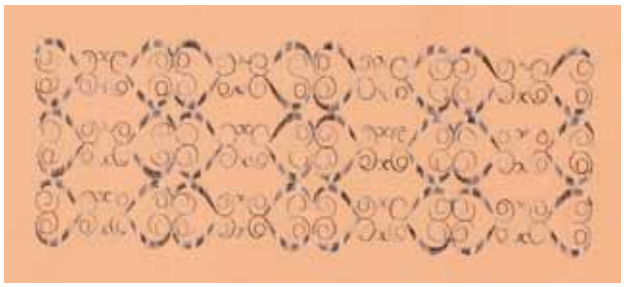

Test-sew first on a piece of the fabric you intend to use for the sewing project.

Tapering

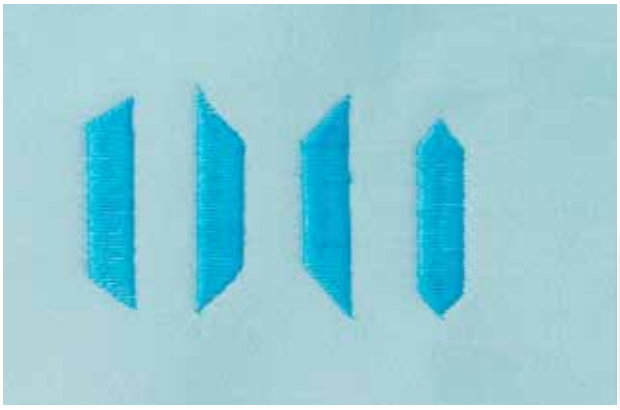

Use the tapering function to create decorative frames and boxes. Select one of the tapering stitches, then the edge alignment of the taper (left). At the end of the first row, program the desired length, pivot your project and sew the following rows or sides in the same manner.

Use the functions Needle Stop Down and Raise Presser Foot when pivoting your project in the corners of the design.

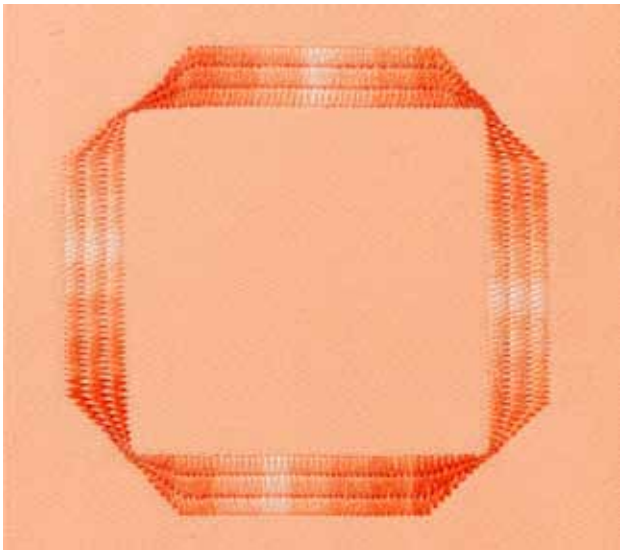

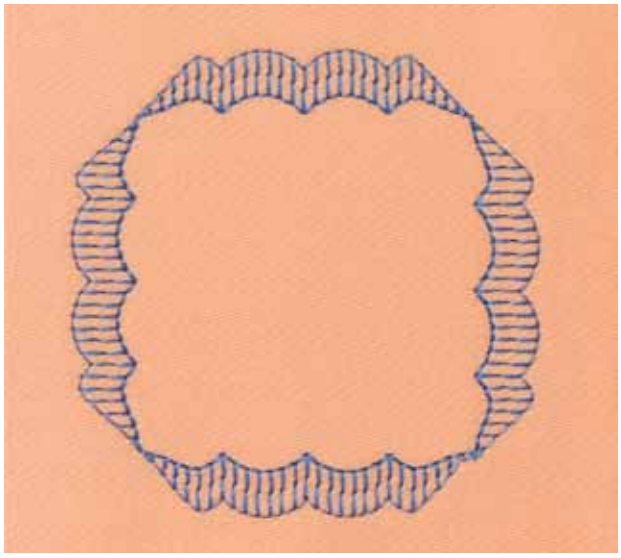

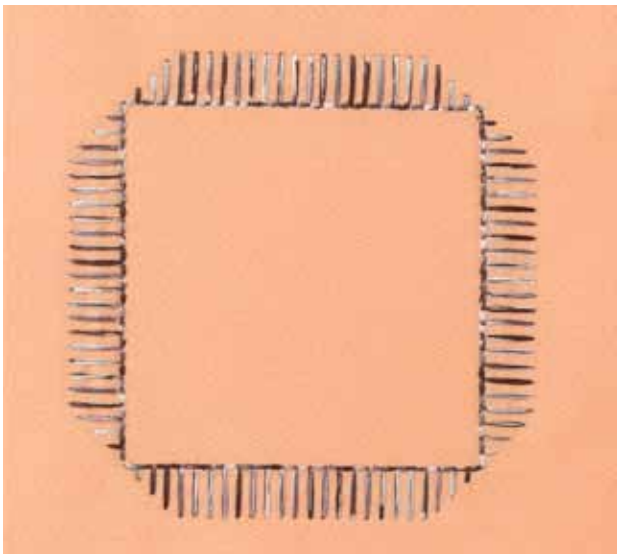

Certain tapering stitches a more appropriate for geometric applications, please sew a test sample before sewing your project.

Skyline

Skyline stitches are forward sewn stitches that can be used for embellishing crafts, cards, quilts, quilt labels and garment labels.

Sewing in Different Directions

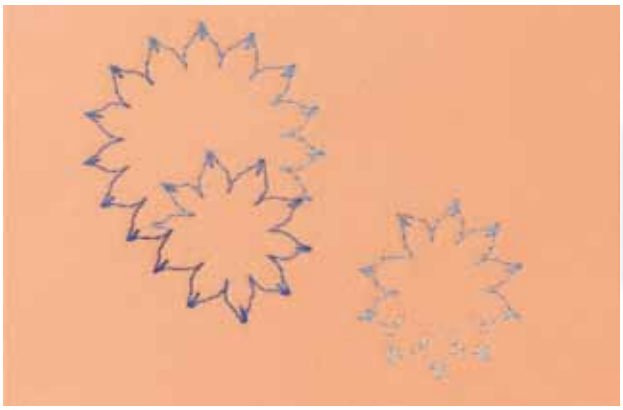

Highly attractive designs can be sewn using the Directional-Sewing function and practical or decorative stitches.

Test-sew first on a piece of the fabric you intend to use for the sewing project.

Sewing Pin Tucks

Sew delicate and decorative pin tucks easily with the cording attachment. The tube on the attachment provides ample room for a cord to be inserted for sewing raised pin tucks.

Attach it simply by screwing it to the stitch plate with the screw provided.

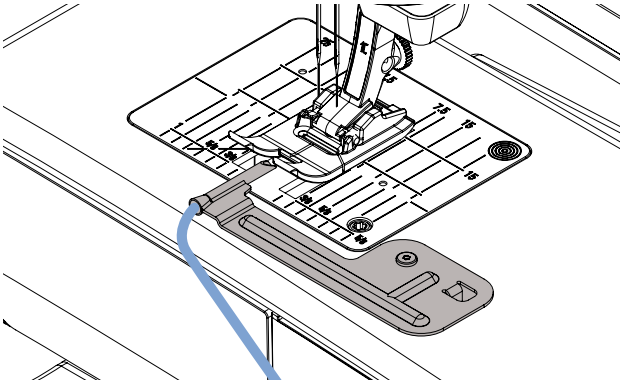

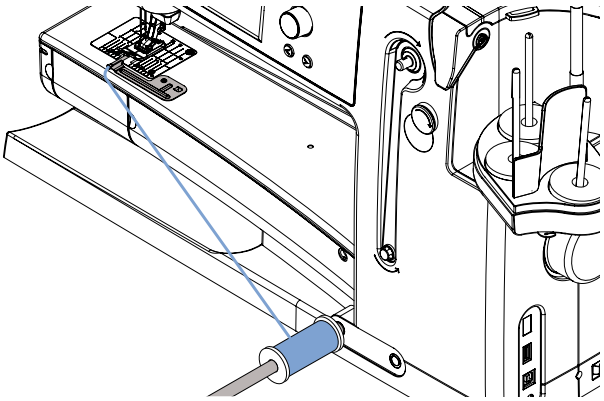

To help with even flow of cording, put the cord spool on the Free Hand System, so it doesn't fall on the floor or tangle while you're sewing.

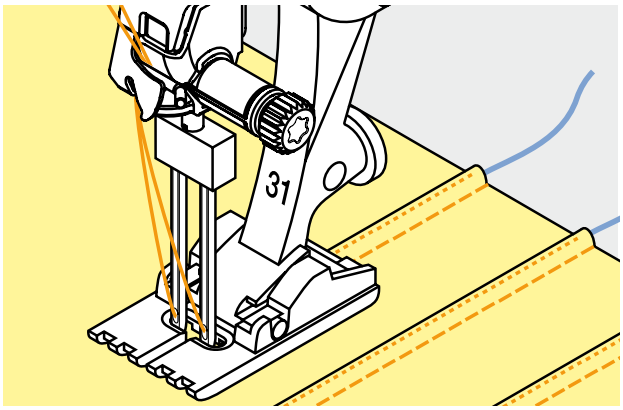

Sewing

- place the fabric under the foot
- begin sewing, the cording is automatically sewn into the pin tucks creating a raised effect
- you can also use the pin tuck attachment for a beautiful scallop off the edge finish on collars, cuffs and tucks

Quilt Techniques

Quilt Labels

- creating personal labels for your quilts
- use the Quilt Alphabet in Combi mode to program lettering, such as your name, your quilts' titles or other information
- embellish the lettering with decorative stitch patterns

Free Motion Quilting

- for all freehand quilt work

Preparation
- pin and baste top layer, batting, and backing together
- attach the slide-on table

Holding the Work
- hold the fabric with both hands like an embroidery frame
- start in the center and work out toward the edges

Quilting a Design
- guide the work using smooth, round movements to form the design of your choice

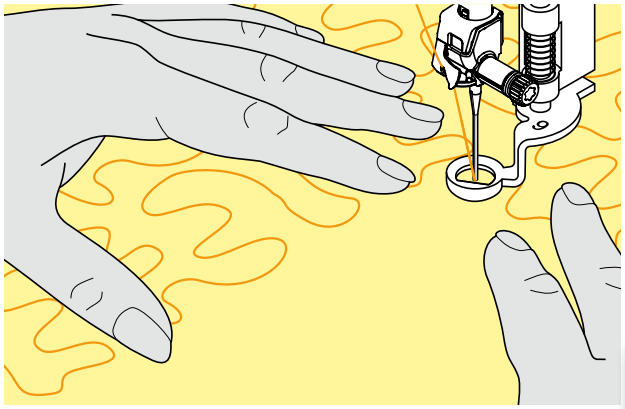

Stipple Quilting
- technique covers the entire surface of the fabric
- the lines of stitching are rounded without any sharp corners; they never cross nor touch one another

- Darning foot no. 9

Free-Motion Quilting and Darning
The two techniques are based on the same Free Motion principles.

Poor Stitch Formation
- if the thread forms loops, the work is being moved too quickly
- if knots are forming on the wrong side, the work is being moved too slowly
- place fabric in a hoop for easier guiding

Monofilament thread breaks
Reduce the motor speed and/or loosen the upper thread tension.

Thread breaks
Inconsistent feeding of fabric.

032299.53.04_1204_B830_EN

BSR Description

BSR (BERNINA Stitch Regulator) Function

The BSR presser foot reacts to the movement of the fabric under the foot and controls the speed of the sewing computer up to the maximum speed possible. The following applies: the faster the fabric is moved the higher the speed of the sewing computer.
If the fabric is moved too fast, an acoustic signal (beep sound) is heard, and the red light of the Start-/Stop Button flashes. The beeper can be turned on or off in the Setup Program or directly on the «BSR» screen.

By activating the BSR function the sewing computer sews either continuously at a reduced motor speed (mode 1, standard), or as soon as the fabric is moved (mode 2). As long as the BSR presser foot is illuminated red, adjustments like threading and changing the needle, for example must not be carried out, as the needle will engage while fabric is moved unintentionally! Without fabric feed the BSR mode is turned off after approx. 7 seconds and the red light goes off.
Please refer to the Safety Instructions!

With Straight Stitch no. 1

This function using a special presser foot allows for free-motion quilting (sewing) using the straight stitch and a pre-selected stitch length (up to 4mm).
A regulated set stitch length is maintained within a certain speed, independent of the movement of the fabric.

With Zig-zag Stitch no. 2

The zig-zag stitch can be used for thread painting or fabric embellishment.
The set stitch length will **not** be maintained when sewing with the zigzag stitch, but the BSR function simplifies the application.

BSR function can be sewn in 2 separate modes of operation

- BSR mode 1 is the active standard
- the sewing computer runs continuously at a reduced motor speed, as soon as the foot control or the Start-Stop-button is pressed
- moving the fabric under the foot will engage the sewing computer to accelerate
- through the continuous needle movement securing in the same position is possible without pressing an additional button

- touch the button «BSR2» to engage BSR mode 2
- the sewing computer will only engage if the foot control or the Start-Stop-button is pressed and the fabric is moved simultaneously
- the movement of the fabric determines the sewing speed
- for securing, the «Securing Function» button must be pressed
- touch the button «BSR1» to engage BSR mode 1

When exceeding a certain speed, adhering to regular stitch length cannot be guaranteed.

Make sure that the lens on the bottom of the BSR foot is not dirty (fingerprints, etc.). Clean lens periodically with soft, slightly damp cloth.

For an even sewing start (one single stitch) the foot control must be pressed and the fabric moved simultaneously.
This also applies for sewing points and straight stitching within a round form.

If the BSR function is deactivated and later re-activated without the sewing computer being switched off in between, the last selected BSR mode is active.

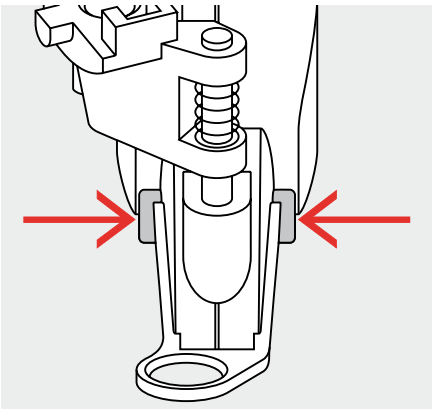

Preparation

- use Slide-on table
- attach the desired presser foot sole to the BSR Presser Foot
  - removing sole: press both buttons (see arrows) on each side of the foot
  - slide the sole down the groove at an angle
  - attaching the sole: slide the sole up in the groove until it clicks into place

Presser Foot Pressure may be reduced depending on the fabric type and thickness.

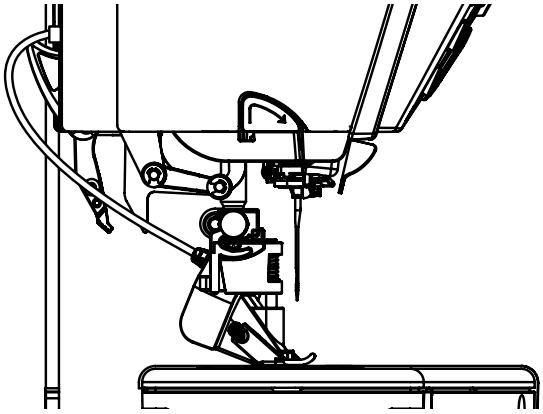

- attach the BSR Presser Foot to the sewing computer and plug the cable in the outlet provided

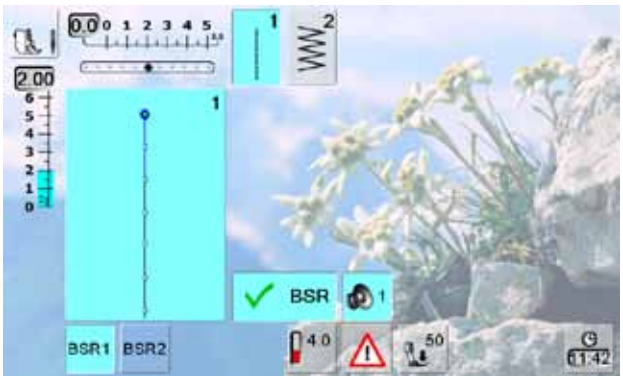

- the «BSR» screen opens automatically
- the BSR mode 1 is activated (BSR1 is standard)
- the basic stitch length setting is 2mm
- set the desired stitch length
- when sewing small forms and stippling, stitch length of 1mm - 1.5mm is suggested

Functions in the BSR mode

Needle Stop Down (Default)/Up

- the arrow points down on the display = the sewing computer stops with needle down, when taking foot off foot control or engaging the Start-Stop-button
- press the needle stop button until the arrow points up = the sewing computer stops with needle up, when taking foot off foot control or engaging the Start-Stop-button

Raise or Lower the Needle

- press the needle stop button - or by pressing the heel on the foot control, the needle can be lowered or raised

Securing With the Start-Stop-Button (only Mode 1)

- unplug the foot control
- place the fabric under the presser foot, lower presser foot
- hold upper and lower thread and start the BSR mode by pressing the Start-Stop-button
- sew 5 to 6 securing stitches
- stop the BSR mode by pressing the Start-Stop-button
- cut threads
- re-start the BSR mode by pressing the Start-Stop-button to continue the stitching process

Securing Function (only Mode 2)

- press the «Securing Function» button
- press the foot control/Start-Stop-button
- short securing stitch sequence are sewn as soon as the fabric is moved under the presser foot. After the sequence is sewn the set stitch length will be activated and the securing function will be automatically deactivated

Free Motion Quilting (only Mode 2)

- the BSR mode is activated
- freemotion quilting can be sewn
- when the securing function button is pressed during free hand quilting, a short securing stitch sequence is sewn and the sewing computer will stop sewing automatically
- the BSR mode is deactivated

Free Motion Quilting without BSR activation

- touch the BSR button (on the left side on the display)
- the BSR mode is deactivated, the buttons «BSR1» and «BSR2» on the left side on the display go off
- normal freemotion quilting can now be sewn with the BSR foot, without automatic regular stitch length

Beeper (Acoustic Signal) Deactivation/Activation

Opening Setup Program

- press the Setup button
- selection menu appears
- touch «5»
- the screen «Audio Settings» appears

Selecting Sound for BSR in the Setup Program

- one sound is set as default
- touch the bar with the speaker icon for BSR one time
- if the bar is gray and the speaker is red, the sound for the beeper is inactive
- if the bar is blue, the sound for the beeper is active
- if the sounds in the Setup Program are generally turned off (field on left side of screen is gray, speaker is red), the icon with the speaker of the «BSR» bar is not visible

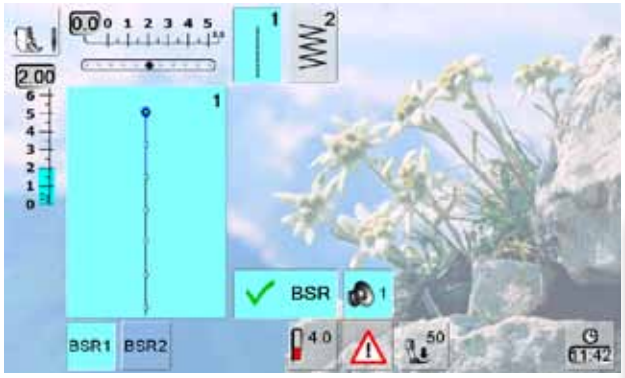

Selecting Sound for BSR on the «BSR» Screen

- touch the bar with the speaker icon for BSR one time
- if the bar is gray and the speaker is red, the sound for the beeper is inactive
- if the bar is blue, the sound for the beeper is active

Generally, the sound selection icon is only visible if the sounds are turned on in the Setup Program.

Activating the BSR Sewing Function:

1. With the Foot Control

- plug in the foot control
- lower the presser foot
- start the BSR mode by pressing the foot control
- a red light appears on the presser foot
- the foot control must be pressed continuously during sewing
- the speed of the sewing computer will be regulated by the movement of the fabric
- by releasing the foot control the BSR mode stops

2. With the Start - Stop - Button

- lower the presser foot
- start the BSR mode by pressing the Start-Stop-button
- a red light appears on the presser foot
- the speed of the sewing computer is regulated by the movement of the fabric
- by re-pressing the Start-Stop-button the BSR mode stops

Deactivating the BSR Sewing Function by using the Start - Stop - Button

Mode 1:

- if the fabric is not moved for approx. 7 seconds, the BSR mode is deactived and the red light on the presser foot goes off

Mode 2:

- if the stitching process is ended by no longer moving the fabric, one additional stitch is made depending on the needle position. The sewing computer always stops with the needle up, even if the arrow on the display points down

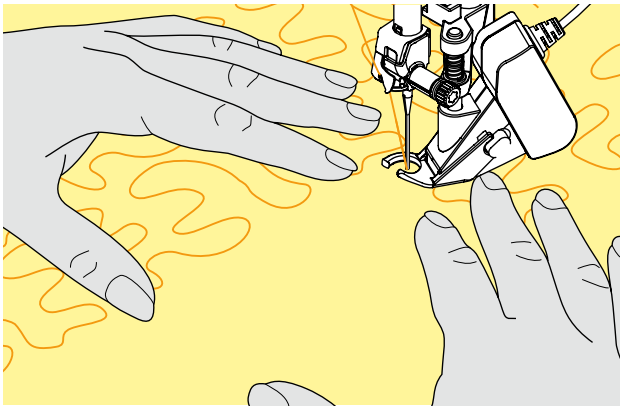

Holding the Work

- hold and guide the taut fabric with both hands
- abrupt movements of the fabric (slowing down, speeding up respectively) can result in slightly too short or too long stiches
- continuous movement of the fabric (no abrupt movements) under the foot will provide best results
- move the fabric in one direction for best results

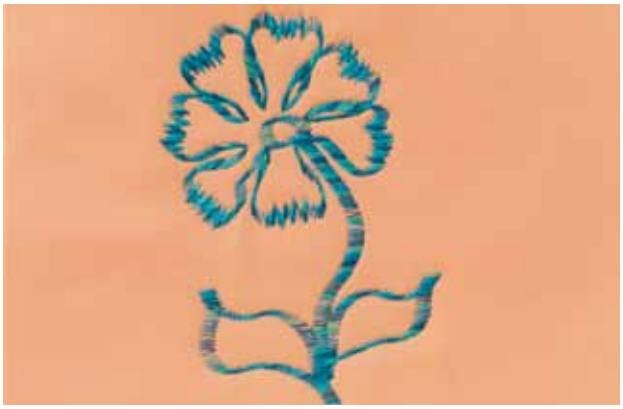

Application Example:

BSR With Zig-zag Stitch no. 2

- the zig-zag stitch can be used for thread painting or fabric embellishment for example
- areas can be filled and forms or pictures created

BSR Function Deactivation

- pull out the plug of the BSR presser foot connection cable on the sewing computer. The straight stitch no. 1 is active
- remove the BSR foot

BERNINA Dual Feed Description

Only use «D» presser feet with cut-out at the center back.
If an incorrect presser foot is attached, the sewing computer will not start with the dual feed engaged. An error message will appear.

With the BERNINA Dual Feed the top and bottom layer of fabric are fed simultaneously, the even feeding enabling perfect matching of striped and checkered patterns.

Presser Feet Selection

- Reverse pattern foot 1D (standard accessory)
- Zipper foot 4D (standard accessory)

More «D» presser feet are listed in the enclosed accessories catalogue.

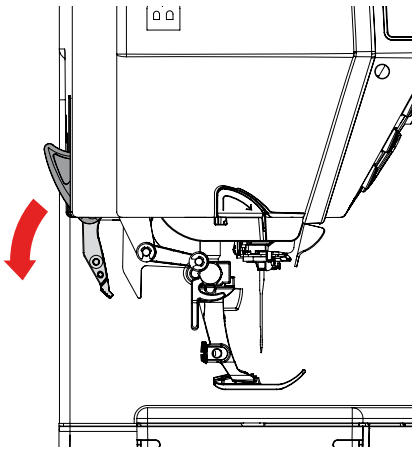

Switching On BERNINA Dual Feed

- raise the presser foot
- press dual feed down until it engages

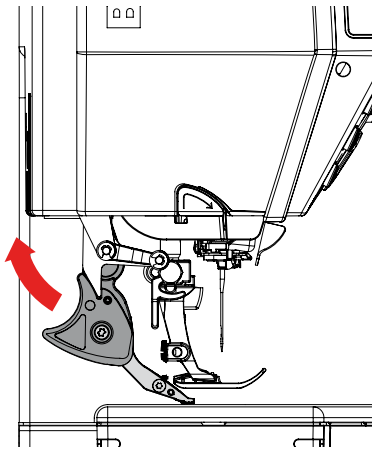

Switching Off BERNINA Dual Feed

- raise the presser foot
- hold dual feed on black holder with two fingers, pull it down, then push backward, slowly letting it slide upward

In order to ensure full functionality of the sewing computer, it is essential to ALWAYS lower the presser foot first thing after switching the dual feed ON or OFF.

Fabrics

Difficult-to-work-with fabrics (with a nap, slippery, sticky etc.):

- velvet, normally sewn with the grain
- towelling
- Jersey, especially when sewing it crosswise to knit
- fake fur or coated fake fur
- fleece-types of fabrics
- batted fabrics
- stripes and checks
- curtain fabrics with pattern repeats

«Sticky» Fabrics

- imitation leather, coated fabrics (Teflon®-coated Dual Feed presser foot)

Application

Sewing

- all sewing techniques on difficult fabrics, e.g. hems, zippers

Patchwork

- accurate stripes and blocks
- decorative stitches up to 9mm stitch width

Appliqués

- Open embroidery foot 20D
- sewing on ribbons and bias-binding

Adjust the presser foot pressure to the fabric. The thicker the fabric the lower the presser foot pressure.

Use the Balance function for corrections, refer to page 52.

Embroidery

Accessory & Preparation

Functions & Settings

BERNINA World

Maintenance/Troubleshooting

Stitch & Motif Overview

Index

032299.53.04_1204_B830_EN

Accessory & Preparation

Accessory 124

Your Supplies 124

Optional 124
Included in the package 124
BERNINA PC Embroidery Software 124
Jumbo-Hoop 125
Mega-Hoop 125

Preparation 126

Attaching the Module 126

Removing the Module 126

Threading the Bobbin 127

Hooping the Fabric 128

Embroidery Stabilizers 129

Your Supplies

Included in the package

- straight stitch plate
- embroidery foot No. 26
- embroidery needle pack
- large, oval embroidery hoop (145x255mm)
- template for large, oval embroidery hoop, VAR 00
- medium embroidery hoop (100x130mm)
- template for medium embroidery hoop
- small embroidery hoop (72x50mm)
- blue template
- USB connecting cable
- 2 template holders
- CD with built-in embroidery motifs

BERNINA Art Design V1

www.bernina.com

Optional

New and limitless possibilities are opened up with the optional accessories offered with the BERNINA embroidery system. Ask your BERNINA dealer for more details!

- embroidery Mega-Hoop (150x400mm)
- template for Mega-Hoop, VAR 00
- embroidery Jumbo-Hoop (260x400mm)
- template for Jumbo-Hoop
- BERNINA PC Embroidery Software
- BERNINA Multiple spool holder
- BERNINA embroidery cards/ Magic Box plus/Mini Box plus
- USB Personal Design Stick

USB Stick

Empty personal design stick to store embroidery designs or combinations.

BERNINA PC Embroidery Software

Exciting embroidery patterns can be combined, added to and altered on the PC with the BERNINA Embroidery Software. New, personal embroidery motifs can also be created. Creativity abounds with this software.

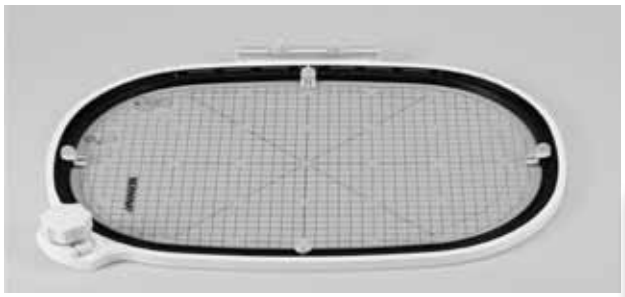

Jumbo-Hoop

With the embroidery Jumbo-Hoop, large embroidery motifs, very large embroidery motif combinations and long borders are particularly easy to embroider.

Attach the slide-on table when working with the Jumbo-Hoop.

Mega-Hoop

With the embroidery Mega-Hoop, large embroidery motifs, very large embroidery motif combinations and long borders are particularly easy to embroider.

Attaching the Module

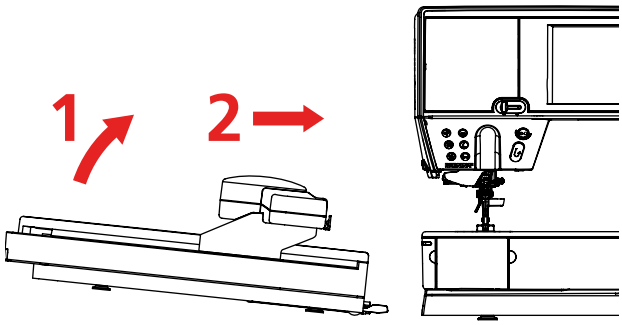

To the Sewing computer

► lift the embroidery module on the left and carefully slide it from left to right into the sewing computer connection

Removing the Module

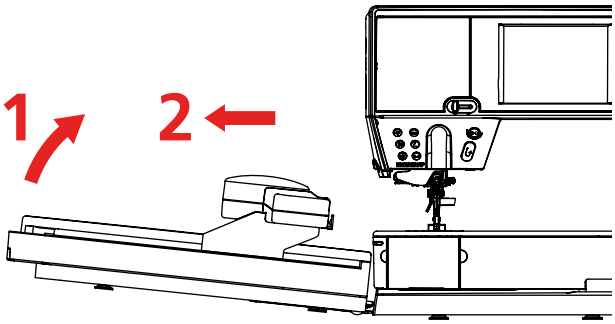

From the Sewing computer

► lift the embroidery module on the left and carefully pull out and off to the left

The slide-on table must not be attached while the embroidery module is being attached or removed.
When attaching the embroidery module ensure that all the units are on the same even surface.
The embroidery computer may run at high speeds when embroidering. Therefore the two units must be placed on a stable surface or the motor speed reduced when embroidering.
Make sure that there is enough space around the sewing computer and embroidery module to allow the unimpeded movement of the embroidery arm!
Always separate the sewing computer and the embroidery module from one another before transporting – do not transport as a single unit.

The slide-on table can only be attached with the embroidery module arm to the far left.
If necessary, use the «Park Module» function to move it.

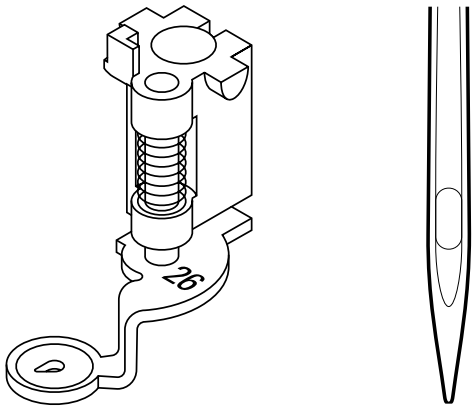

Embroidery Foot No. 26

- to embroider attach presser foot No. 26 to the embroidery computer and raise the presser foot

Embroidery Needle

- always use a SUK needle for embroidery (on any fabric)
- depending on the embroidery thread, use a no. 70-SUK to no. 90-SUK needle
- use a needle which is not damaged
- raise the needle

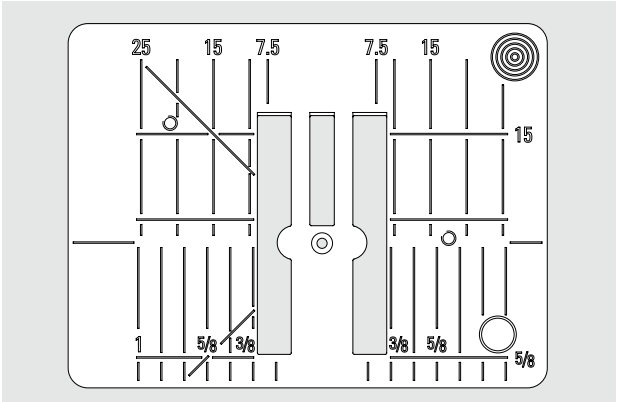

Straight Stitch Plate

- the straight stitch plate has a small needle hole. The needle insertion area (interlocking of upper and lower thread) is limited and the stitching therefore optimized for nicer results
- remove standard stitch plate and replace it with the straight stitch plate

Threading the Bobbin

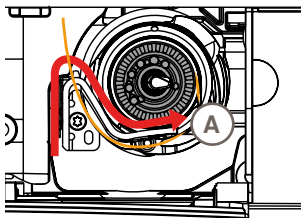

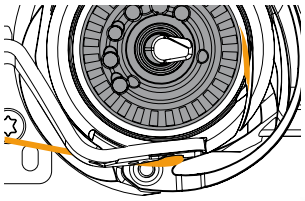

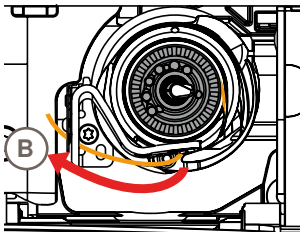

- pull thread to the right through slit **A** and to the left under the spring
- hold thread in curve of bobbin-case stop and guide along edge, holding far to the right, until it catches
- guide thread to left, pull over thread cutter **B** and cut off

Move the slide-on table away to the left before opening the bobbin door, and carrying-out tasks like changing the bobbin or threading the hook.

Check the threading path

After threading the hook, hold the mirror under the swung-out hook unit as shown in the pictures below.

- Position of bobbin thread when threaded for embroidery

Hooping the Fabric

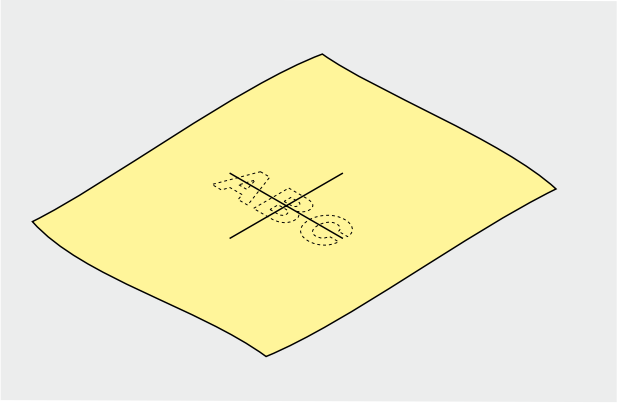

Centering

- determine the center of the fabric to be embroidered
- mark with a fabric marker or chalk

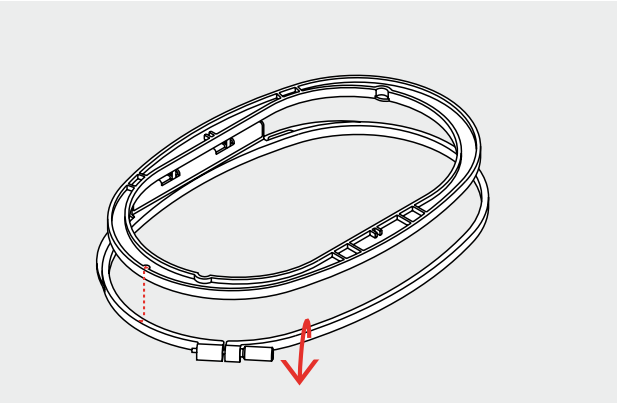

Using the Embroidery Hoop

- loosen the screw(s)
- remove the inner hoop
- the arrows on both hoops must match
- the arrows on the large and medium hoops and on the Mega Hoop are at the center front, on the small hoop, they are to the right side

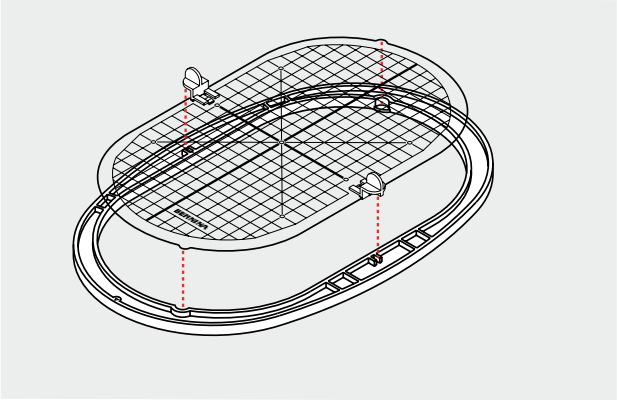

Embroidery Template

- there is an embroidery template for each hoop
- the embroidery area is marked in 3/8" (1cm) squares
- the center and end point holes of the center lines are with holes for transferring marks to the fabric
- place the template in the inner hoop, so the BERNINA logo is at the front edge (by the arrows) and can be read
- placed in this way, the template sits automatically in the inner hoop
- the finger hole or the template holder make it easier to remove the template from the hoop

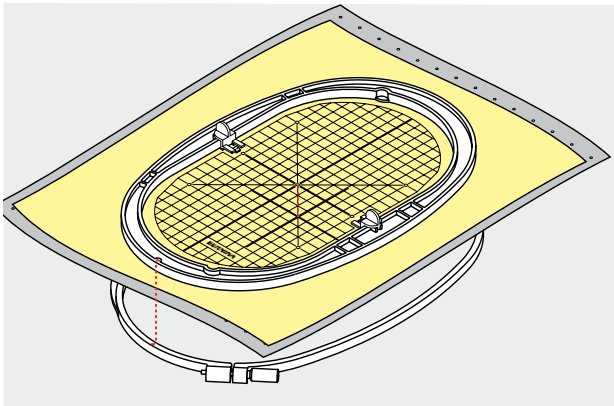

Hooping the fabric

- place the fabric on the outer hoop; line up the marked center point on the center of the template
- place the fabric and inner hoop on the outer hoop
- match the arrows of both hoops
- fit hoops into each other; ensure that the fabric does not move
- hoop the material to be embroidered tightly, tighten the screw
- remove the template

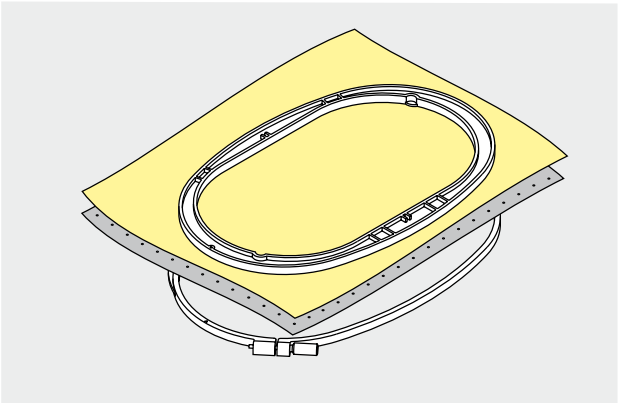

Tear-away Stabilizers

- similar to interfacing; excess is easily torn away
- one or more layers can be used
- available in different weights
- for more stability, apply to the wrong side of the fabric with temporary spray adhesive before hooping
- carefully tear away excess stabilizer from the back of the embroidery after stitching
- stabilizer will remain under larger embroidered areas

Application:

- for all woven fabrics and fabrics which are not elastic

Cut-away Stabilizers

- one or more layers can be used
- available in light and heavy weight
- for more stability, apply to the wrong side of the fabric with temporary spray adhesive before hooping
- carefully cut away from the back of the embroidery after stitching
- stabilizer will remain under larger embroidered areas

Application:

- for all elastic fabrics, especially suited for knits

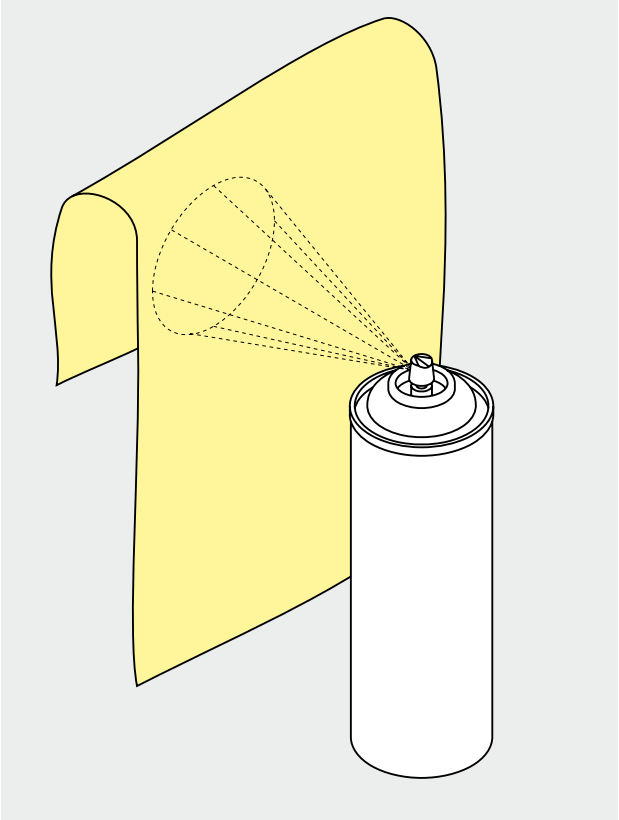

Adhesive Spray

- please avoid using adhesive spray next to your embroidery system
- for more stability, spray the stabilizer and adhere to the wrong side of the fabric carefully smoothing fabric so there are no puckers
- use adhesive carefully and spray from a distance of 25cm - 30cm (9.8 inches to 11.8 inches)

Application:

- stretch and knitted material: to retain shape
- appliqué: position appliqués perfectly
- two or more pieces of fabric: avoid slipping of fabric layers
- fabric pieces: position fabric pieces on stabilizer, i.e. pocket flaps
- napped fabrics (i.e. velvet) that should not be clamped in the hoop because of the possibility of getting hoop marks

Spray Starch for Additional Stiffening

- spray starch is ideal for stiffening fine, soft or loosely woven fabrics
- spray the area to be embroidered, let dry or press gently with a warm iron
- always use an additional stabilizer such as water soluble stabilizer on the wrong side of the fabric

Application:

- ideal for fine, loosely woven fabrics, e.g. batiste, fine linen, etc.

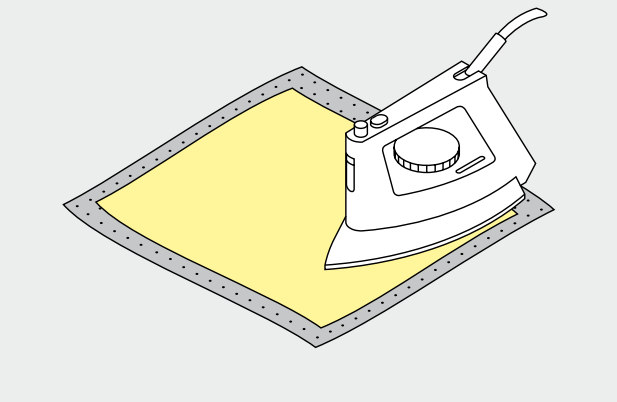

Iron-on Interfacing

- must be preshrunk by soaking in warm water
- this is pressed (fused) to the wrong side of the fabric
- iron-on interfacings are available in a variety of weights and should be selected to suit the fabric being used
- removable iron-on interfacing is also available

Application:

- to provide body and shape for fabrics onto which motifs will be placed
- use in conjunction with appropriate stabilizer

Paper Backed Adhesive Stabilizer

- place stabilizer in hoop, paper side up
- use a pointed object (e.g. scissors) to score the paper and remove it to reveal the self-adhesive surface
- position the piece of fabric to be embroidered on the stabilizer

Application:

- intended for delicate fabrics such as jersey or silk
- for hard to hoop fabrics and fabrics such as velvets

When using paper backed adhesive stabilizer make sure that the adhesive residue on needle, stitch plate and hook area is removed.

Water Soluble Stabilizer for Fabric With a Pile and Lace Embroidery

- water soluble stabilizer looks like plastic wrap
- dissolve stabilizer in warm water when embroidery is complete
- water soluble stabilizers are ideal protection for fabrics with a thick or looped pile such as toweling
- place on top of toweling and high nap fabrics backed by appropriate stabilizer for fabric and motif. This also prevents the threads from sinking into the fabric and prevents fabric from showing between embroidery stitches
- use spray adhesive to fix stabilizer if necessary
- for fabric with a pile, reinforce with additional, suitable stabilizer on the wrong side if necessary
- for lace embroidery place one or two layers of water soluble stabilizer in hoop (as the motif is not embroidered on any fabric, only the thread embroidered motif is left)
- after dissolving lay the motif down flat and let dry
- water soluble stabilizer can also be removed by gently tearing it away when used as a topping on non-washable fabrics like velvet

Application:

- ideal for toweling, velvet, bouclé knits, etc.
- ideal for fine, sheer fabrics such as organdy, batiste, etc.
- recommended for use as a stabilizer with low stitch count motifs
- use heavier water soluble stabilizer to stitch lace motifs

Functions & Settings

Overview 132

Details of Embroidery Module 132

Display 134
- Entry to Embroidery Mode 134
- Embroidery Alphabet 134
- BERNINA Motif 135
- My Designs 135
- Motifs from USB Personal Design Stick 135

Functions 136

Embroidery 136

Important Embroidery Information 138

Embroidery threads 138

Bobbin threads 138

General 139

Different stitch types 140

Details of Embroidery Module

1 Bracket for attaching embroidery hoop
2 Sewing computer guide rails
3 Connection to the sewing computer
4 Embroidery arm
5 Connection for embroidery module

Display

Entry to Embroidery Mode

M Embroidery/Sewing mode

Embroidery Alphabet

BERNINA Motif

My Designs

Motifs from USB Personal Design Stick

Embroidery

Some functions feature tips for the operating of the Stitch Width and Stitch Length Knobs. Altered embroidery motifs are reset to their basic settings by touching the respective icons.

Embroidery Mode
- select embroidery motifs from the folders «Alphabets», «Motifs», or «My Designs»

USB Stick
- access embroidery motifs which are saved on the USB stick

Selecting Alphabets
- access built-in embroidery alphabets

Selecting Motifs
- access built-in embroidery motifs

Selecting My Designs
- access personal, saved embroidery or sewing motifs
- access the last motif sewn

Return to Selection Menu
- back to selection screen

Zoom
- the motif is enlarged

Moving the Enlarged Motif
- the motif can be moved right on the screen in all directions with your finger or the touch pen

Select Hoop Menu
- display of the optimal hoop for the embroidery motif selected
- touch the icon and the screen with the hoop selection appears

Virtual Positioning
- icon is inactive (gray) if the motif is repositioned, the hoop does not move
- touch icon (blue active) if the motif is repositioned, the hoop simultaneously moves with it to the new position

Motif Center
- the motif center is indicated by the cursor
- the hoop is moved until the needle is exactly in the center of the motif

Color Numbers
- display of motif color numbers
- touch the icon
- color information bar appears
- to close color information bar, touch icon again

Show Grid
- touch once - a large cross hair cursor indicates the hoop center
- touch the icon again, the template grid appears on screen to position the embroidery motif accurately
- touch third time to deactivate all

Presser foot indicator
- embroidery foot no. 26 is displayed by default
- for couching cords in an embroidery motif touch the icon
- touch «Free Motion Couching Foot no. 43» and attach presser foot no. 43

Retrieve
- function only appears when combining designs
- switches between the motifs combined
- active motif is shown in color
- touch the icon to activate a motif or a motif combination

Change to Embroidery Menu
- the screen changes to embroidery menu and the embroidery motif is ready to be embroidered

Leave Active Screen
- close application
- return to the last active screen

Change Stitch Type
- satin stitches can be changed to step stitches (fill stitches)
- the stitch density can be altered

New Motif
- the overview of the last opened function (Alphabets, Motifs, My Designs) appears
- select new motif

Add Motif
- the overview of the last opened function (Alphabets, Motifs, My Designs) appears
- add new Motif to another Motif

Duplicate Motif
- active embroidery motif is duplicated

Rescale Motif Proportionally
- display of the alteration in percent (%)
- to enlarge motif, turn stitch width knob clockwise
- to reduce motif, turn stitch width knob counter-clockwise

Rescale Motif in Height or Width
- display of the alteration in percent (%)
- to change embroidery motif sideways (horizontal), turn stitch width knob
- to change embroidery motif lengthwise (vertical), turn stitch length knob

Letter Manipulation
- display of the alteration in percent (%)
- turn the stitch width knob to change letter spacing in mm steps between letters
- turn the stitch length knob the letters form a convex or a concave arc

Embroidery speed
- optimum or maximum embroidery speed
- default is optimum speed

Move Motif
- display of the alteration in 1/10mm
- to move embroidery motif sideways (horizontal), turn stitch width knob - to move to the right turn knob clockwise, to move to the left turn knob counterclockwise
- to move embroidery motif lengthwise (vertical), turn stitch length knob - to move up turn knob clockwise, to move down turn knob counterclockwise
- to move embroidery motif diagonally, turn stitch width and length knobs (number is the same in both information icons)

Rotate Motif
- display of position in degrees (°)
- to rotate embroidery motif clockwise, turn stitch width knob clockwise
- to rotate embroidery motif counterclockwise, turn stitch width knob counterclockwise
- touch icon several times and the embroidery motif is rotated in 90° steps, clockwise (0°, 90°, 180°, 270°, 360°)

Hoop Relocator
- the hoop moves horizontally to the center
- touch ✕, the hoop moves back to the previous position

Single/Multi-Color Motif
- if the icon is active, the entire motif will be stitched in one color (without stopping)
- if the icon is inactive, the colors will be embroidered individually

Thread Tension
- change upper thread tension
- the respective value appears in the icon

Mirror Image (Left/Right)
- the motif is mirrored horizontally (left/right)

Mirror Image (Up/Down)
- the motif is mirrored vertically (up/down)

Embroidery Sequence Control (in the event of thread breakage)
- in the left screen the motif is shown in the normal size
- in the right screen the motif is enlarged

Save
- the Save screen appears

Basting Box
- the embroidery motif is outlined with a straight stitch
- touch icon again, the symbol changes and Basting Box follows outline of hoop
- touch icon again to switch off the Basting Box function, otherwise it'll remain active even after selection of a new motif

Move Hoop
- if the fabric has to be re-hooped when stitching a large embroidery motif (e.g. lettering, borders etc.), the hoop has to be moved to the last stitch of the already embroidered part with the stitch width and stitch length knob

Motif, Color, Sequence Selection by Number
- select individual motifs by number
- select thread colors by number
- in the event of thread breakage, select the stitching position by number

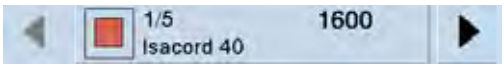

Color Information Bar
- information about the active color:
  - display of active colors
  - position of active color (first number)
  - number of all colors (second number)
  - thread/color code of selected thread brand
- right and left arrow change the current stitch color
- the embroidery hoop moves to the first stitch of the active color
- the active color can also be individually embroidered

Park Module
- the embroidery arm travels horizontally to the left to the park position
- remove the embroidery hoop
- change to the sewing mode
- even with the attached embroidery module, the sewing projects are carried out trouble free

Move Hoop to Back
- the hoop moves vertically to the far back
- better access for changing the bobbin

Disengage Jump Stitches
- icon is active by default, jump stitches are automatically cut
- touch icon, jump stitches must be cut by hand

Endless Embroidery
- screen open to create a border (row of motifs)

Fit to Hoop
- when embroidering borders, the size of the motifs entered is adjusted so that they fit in the hoop

Time/Alarm
- set the current time (hh:mm) at the top of the screen using the «+» and «-» icon
- touch the alarm key at the bottom of the screen
- set the alarm time with the «+» and «-» icon or the knobs; a personal message may be entered via the keyboard
- the current time is now displayed in red

Embroider the Motif by Color
- with the icon deactivated, the number and sequence of colors remain as initially set

Reduce Color Changes
- with the icon activated, the motif sections with identical colors are resequenced and color changes reduced

Embroidery threads

One of the most important elements in successful embroidery is the quality of the thread. We strongly recommend that you purchase thread from a reputable BERNINA dealer in order to avoid irregularities, thread breakage, etc. which so often occurs with poor quality threads.

Embroidery is particularly effective if you use 40wt glossy rayon or polyester embroidery threads as upper threads. They are available in a wide range of colors for beautiful embroidery.

Polyester threads

Polyester with a brilliant sheen is a hard wearing colorfast thread and has a high tensile strength. It is suitable for all types of embroidery, especially children's clothing and items which will be washed often or subject to much wear and tear.

Rayon threads

Rayon is a soft viscose fiber with a brilliant sheen and suitable for fine, delicate embroidery, or items that will not receive excessive wear and tear.

Metallic wrapped polyester thread

Metallic thread is a light- to medium weight thread suitable for special effects in embroidery.

Embroidery needle

- correct size thread must correspond with correct size needle
- replace needle regularly

When sewing with metallic or other specialty threads, pull the net over the needle-thread spool. This will cause the needle thread to be feed more evenly.

Bobbin threads

Bobbin-Fil (special bobbin thread)

Bobbin-Fil is an especially soft and light polyester thread suitable for bobbin thread. This special bobbin thread ensures a steady thread tension and an optimal intertwining of the upper and bobbin thread. The thread produces even stitching on both, the right and wrong side of the fabric.

Darning and embroidery thread

Fine mercerized cotton thread suitable for most embroidery (Mettler 60 weight suggested).

In most cases, bobbin thread for embroidery is either white or black.
Some special cases, as with embroidered lace, require same thread in top and bobbin.

Choosing an embroidery motif

- simple motifs with a low stitch count are suitable for embroidery on fine fabric
- large-scale, densely embroidered motifs (e.g. with multiple color and embroidery direction changes) are suitable for medium and heavy weight fabrics

Embroidery test

- always stitch an embroidery test on a sample fabric. Adjust color, thread quality, needle, stitch density, tension, etc. to suit the motif if necessary
- for the test use the same fabric and stabilizer that you will use on the project

Scaling/Sizing motifs

- motifs can be scaled/sized with using the on-screen icons and with Art Design on the PC
- for the majority of embroidery motifs and fonts, increasing and decreasing in a range of 20 % produces the most satisfactory results

Different stitch types

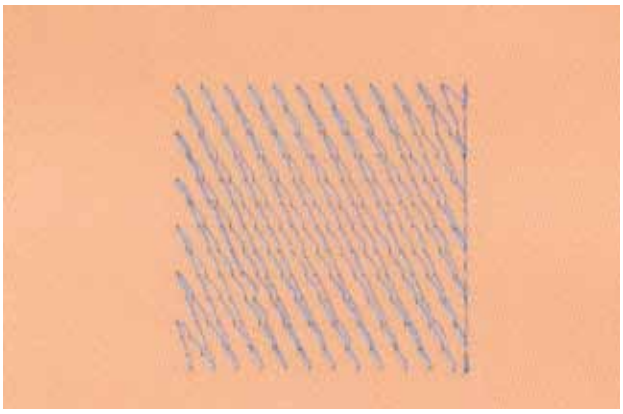

Underlay stitches

- underlay stitches are the foundation of a motif and are used to stabilize the base fabric and hold it in shape. They also prevent the covering stitches of the motif from sinking into the knit or the nap of the fabric

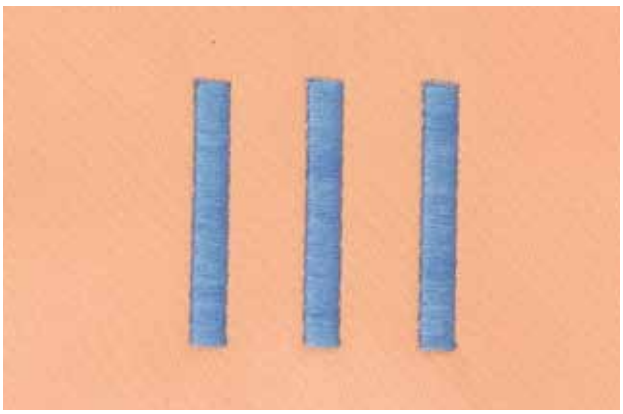

Satin stitch

- the needle moves left to right and vice versa. The result is a very dense, covering zig-zag stitching to fill the shape
- satin stitching fills are ideal for narrow and small shapes. Satin stitching is, however, not suitable for larger areas, since wide stitches are too loose and do not cover the fabric properly. In addition there is the danger that with too long stitches the threads could catch on something which would damage the embroidery

Step stitch

- a fill stitch with stitches of specified length sewn in rows used primarily to fill large areas quickly

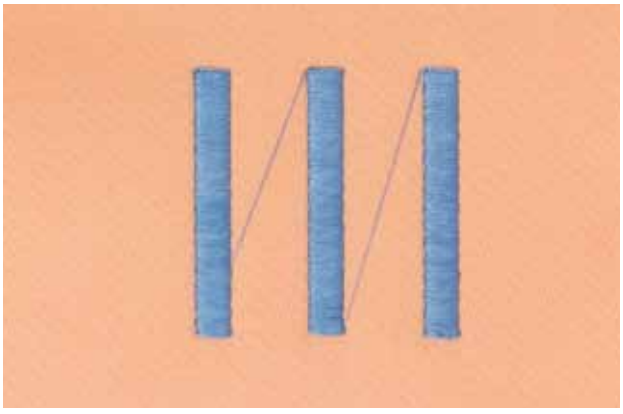

Jump stitches

- long stitches that skip over fabric after one part of the motif finishes and the next begins
- before and after the jump stitch securing stitches are sewn
- jump stitches are trimmed before the next color starts to embroider

Embroidery Motifs 142

Selecting 142
From Embroidery Computer 142
From USB Stick 142

Alphabets 142
Entering Lettering 142
Selecting Alphabets 142
Selecting Motifs 142
Selecting from My Designs 142

Motifs from BERNINA 143
Motifs Summary 143

My Designs 143
Overview of own Designs 143

With Functions 144
Move Motif 144
Enlarging or Reducing Motif Proportionally 144
Adjust the Motif Height or Width 144
Rotate Motif 145
Mirroring 145
Motif Center 145
Grid 145
Absolute embroidery check 145
Select Hoop 146
Zoom 146
Moving the Enlarged Motif 146
Altered Motif Size Display 146

Endless Embroidery 147

Creating Combinations 149
Create Lettering 150
Positioning 150
Further Text Lines 151
Motifs and Lettering 151

Properties 152
Fill Stitch Type 152
Altering Stitch Density 153
Reallocating Motif Colors 153
Embroidering Motifs in One Color 153
Embroidering the Motif by Color 153
Reducing Color Changes 154
Embroidering Lettering in Multi Colors 154
Basting Box 154

Saving 155

Motifs 155

Embroidery Computer Memory 155

USB-Stick 155

Overwriting Motifs 156

Deleting 157

Delete a Saved Motif 157

Delete all Saved Motifs 158

Embroidery 159

Starting to Embroider 159
Selecting the Embroidery Hoop 159
Attaching the Embroidery Hoop 159
Embroidery Menu 160
Starting to Embroider With the Start-Stop-Button on Head Frame 160
Interrupting With the Foot Control 160
Completing the Color 160
Starting to Embroider With Foot Control 161
Changing Color 161
Embroidery Screen 161

Embroidery Support 162

Thread Breakage when Embroidering 162
Upper or Lower Thread Breaks 162
Embroidery Sequence Control when Thread Breaks 163
Resuming Embroidering 163

Embroidery Projects 164

Selecting Individual Motifs 164

Combining Motifs 164

Alphabets 164

WordArt 164

Importing Stitch Patterns into Embroidery Mode 165

Endless Embroidery 165

Mega-Hoop 166

Jumbo-Hoop 166

Selecting

From Embroidery Computer

Select embroidery motifs from the «Alphabets», «Motifs» and «My Designs» files.

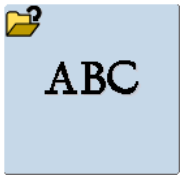

Selecting Alphabets

- touch the «Alphabets» icon in the Selection menu
- the various alphabet types are visible in the display
- select an alphabet type
- a keyboard appears

Selecting Motifs

- touch the «Motifs» icon in the Selection menu
- the embroidery motifs appear in the display in color
- select an embroidery motif = touch the desired motif icon

Selecting from My Designs

- touch «My Designs» in the Selection menu
- your saved personal motifs appear in the display in color
- touch the desired motif icon

From USB Stick

- insert USB stick
- touch the USB stick icon
- the embroidery motifs on the stick appear in the display in color
- touch the desired motif icon

Alphabets

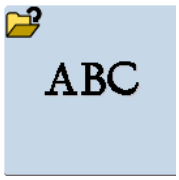

Letters can be combined and either directly embroidered, altered or combined with motifs with the embroidery computer.

Entering Lettering

- select the alphabet desired from the Selection menu
- a special screen with a keyboard appears
- the icon «ABC» (upper case) is automatically activated
- select the desired characters
- for spaces, touch the larger bar at the bottom of the keyboard
- letters appear in the text bar

- to delete individual letters, touch arrow icon
- letters are deleted from back to front
- to delete all letters, touch the text bar

If all the lettering cannot be displayed in the hoop, rotate the lettering by 90° (there is then more room for the lettering in the entire length of the embroidery hoop). If this does not help, decrease the lettering size or reduce the number of letters.

Motifs from BERNINA

All embroidery motifs can be embroidered directly or altered and combined with various functions which the embroidery computer provides.

Motifs Summary

- select the desired motif in the embroidery motif library

My Designs

All embroidery designs can either be embroidered as-is, or changed and combined using the various functions offered by the embroidery computer.

Overview of own Designs

- select the desired motif in the My Designs library

With Functions

To activate the functions touch the appropriate icon and make alterations with the stitch width and stitch length knobs.

Move Motif

- to move the embroidery motif horizontally, turn stitch width knob
- to move the embroidery motif vertically, turn stitch length knob
- the alteration is displayed in 1/10mm in the Information Area
- to move the embroidery motif diagonally, turn stitch width and stitch length knob
- when the same number appears in both Information Areas, the motif is moved diagonally
- to reset the embroidery motif back to the center, touch the Information Areas or select this function (Move Motif) again

Enlarging or Reducing Motif Proportionally

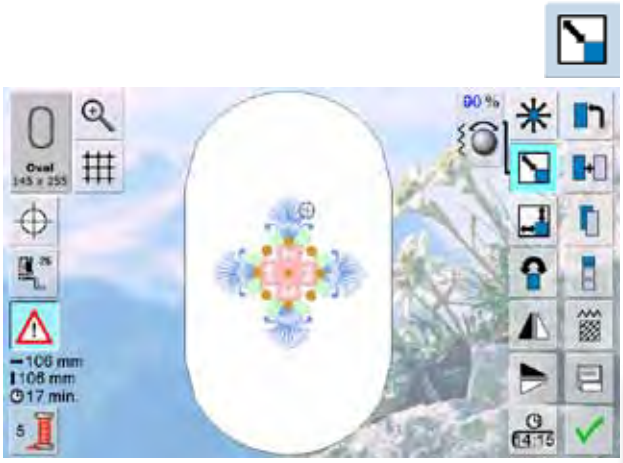

- enlarge embroidery motif, turn stitch width knob clockwise
- reduce embroidery motif, turn stitch width knob counter-clockwise
- the alteration is displayed in percent (%) in the Information Area
- to reset to the basic setting (100%) of the embroidery motif, touch the Information Area

- when rescaling within a 90% to 120% range, the size will be adjusted accordingly without recalculation of stitches
- when rescaling under 90% or over 120%, the stitches will be recalculated

Adjust the Motif Height or Width

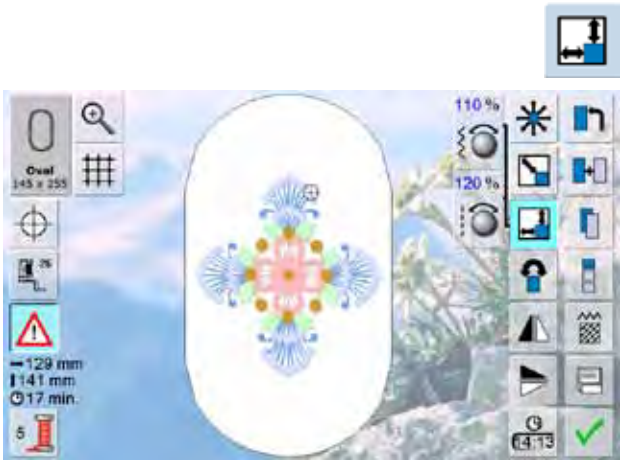

- to adjust the width (widen or reduce the motif horizontally) turn stitch width knob clockwise to widen or counterclockwise to reduce motif
- to adjust the height (lengthen or reduce the motif vertically) turn stitch length knob clockwise to enlarge or counterclockwise to reduce motif
- the alteration is displayed in percent (%) in the Information Area
- to reset to the basic setting (100%) of the embroidery motif, touch the Information Area

Rotate Motif

- to rotate the embroidery motif clockwise, turn the stitch width knob clockwise
- to rotate the embroidery motif counterclockwise, turn the stitch width knob counterclockwise
- the position is shown in degrees (°) in the Information Area
- to reset to basic setting (0°/360°), touch the Information Area
- to rotate the embroidery motif clockwise in 90° increments, touch the Rotate Motif icon several times (0°, 90°, 180°, 270°, 360°)

Mirroring

- to mirror the embroidery motif horizontally, touch icon «Horizontal Mirroring (Left/Right)»
- to mirror the embroidery motif vertically, touch icon «Vertical Mirroring (Up/Down)»

Motif Center

- touch the icon
- the exact motif center is displayed in the motif
- the embroidery hoop moves to place the needle exactly over the center of the motif
- touch the icon again, the first stitch of the embroidery motif is marked in the display again

Grid

- a large cursor shows the center of the hoop
- touch the icon again
- with the grid visible the motif can be positioned easier and more accurately
- touch the icon again to make the grid disappear

Absolute embroidery check

- with the Touchpen, every single position of the embroidery motif can be selected
- once the motif is selected and edited attach hoop to module
- use Touchpen to determine placement within the hoop
- place the Touchpen on any part of the motif
- the cursor (indicating the needle position) will then move to the selected position and the hoop will move to correspond with the position of the needle
- the «Motif Center» icon must be deselected in order to utilize Absolute check

If the thread breaks, the Touchpen can also be placed on the area of the screen where the thread broke and the hoop moves to that area.

Select Hoop

The best embroidery results are achieved if the smallest possible hoop is selected to match the embroidery motif.

- touch the icon «Select hoop»
- after selecting a hoop the screen automatically closes and the embroidery motif appears in the respective hoop

Zoom

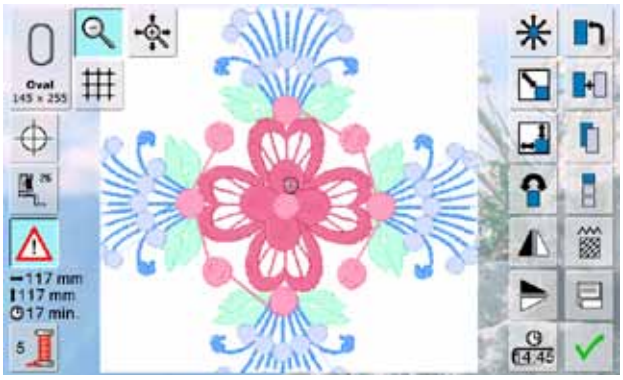

- the motif is enlarged
- within the hoop, the motif can be moved into any direction directly on the screen with your finger or the touchscreen pen

Moving the Enlarged Motif

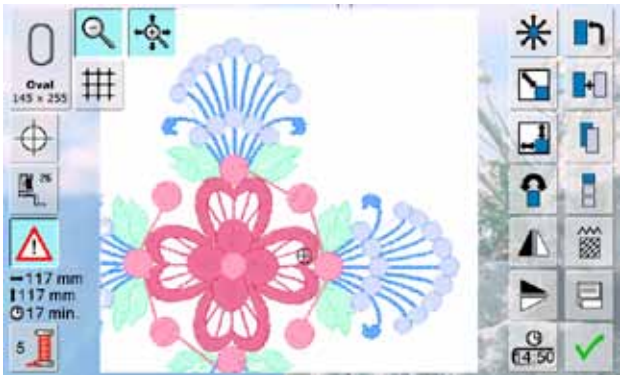

- the motif together with the hoop can be moved into any direction directly on the screen with your finger or the touchscreen pen
- in this case the motif won't be moved within the hoop

Altered Motif Size Display

The width and height of the embroidery motif is displayed in millimeters (mm)

When embroidering a border, it is advantageous to use the Mega or Jumbo Hoop. The fabric requires less rehooping than with the Oval Hoop.
We recommend marking reference lines on the fabric, and using the template when hooping and rehooping. Here, the reference lines must run parallel to the lines on the template.

- select from the «Motifs of BERNINA» embroidery motif no. 9
- touch «Endless Embroidery» function

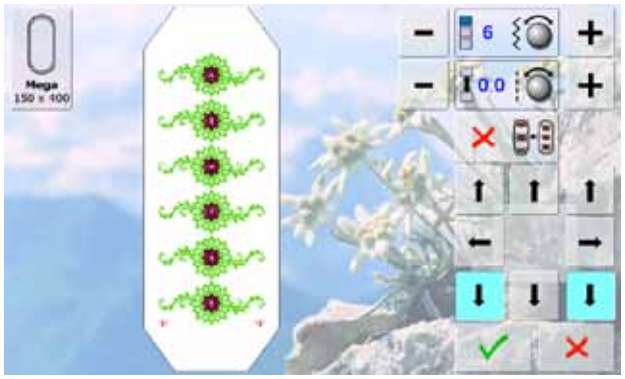

- the motif is duplicated in the optimum number to fit the hoop
- the reference points – necessary when rehooping the fabric – are also stitched out
- the arrow buttons may be used to add additional reference points in different directions

- use the stitch width knob or the «+» or «-» fields to increase or decrease the number of motifs
- touch field in center, for starting position

- use the stitch length knob or the «+» or «-» fields to change the distance between the motifs. Display is in mm
- touch field in center, for starting position

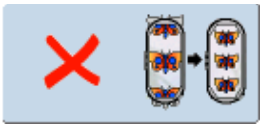

- should more motifs be entered manually than will fit in the hoop, the hoop appears in red
- use the «Fit to hoop» function to automatically adjust the size of the motifs so they all fit in the hoop

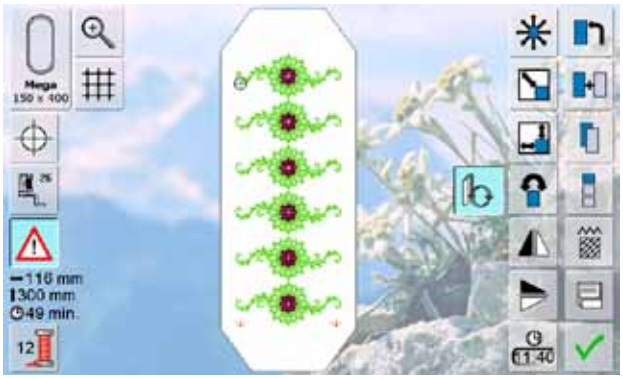

- touch ✔ to switch to the Edit screen
- all functions are available as usual
- touch ✔ to switch to embroidery screen and embroider the border

- in the embroidery menu and embroidery screen it's possible to change the embroidery speed

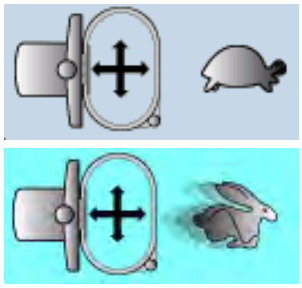

Embroidery speed

Depending on the embroidery position and the high speed achievable with the BERNINA 830, you have speed options from which to choose.
Default is «optimum» speed and, in addition, «maximum» speed is also available. In order to activate «maximum speed».

- touch the icon «embroidery speed»
- the maximum embroidery speed-mode is activated
- please note that the quality of the embroidered motif cannot be guaranteed with maximum speed
- by touching the icon «embroidery speed» again or by switching off or on the embroidery computer, the optimum embroidery speed is activated again

- after the reference points are stitched, touch the «Endless embroidery» icon

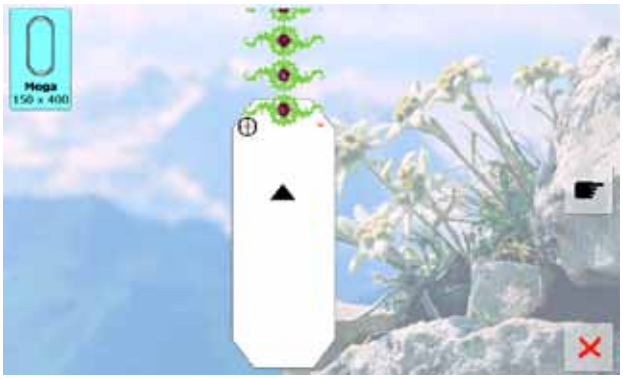

- an animation shows that the fabric must be rehooped
- rehoop fabric so that the stitched reference points are in the top embroidery area of the hoop
- when rehooping, make sure that the reference points do not lie too near the edge of the hoop, or they will be out of the stitching area (at least 3cm from the top edge of the hoop)

- attach hoop, then touch the «Next» icon

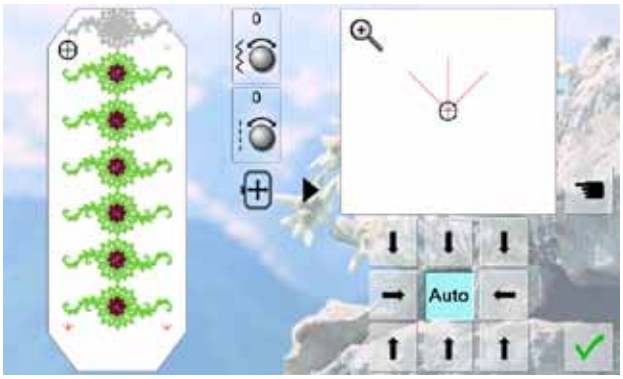

- the hoop is moved near the last stitch
- using the stitch width and/or the stitch length knob, move the hoop until the needle is over the last stitch
- touch ✔ to switch to the embroidery screen and continue embroidering
- repeat these steps until the border is the desired length

- «Auto» is activ, the hoop moves automatically to the last reference point
- the arrow buttons can be used to specify on which side of the embroidered section the next one is to be joined
- hoop fabric accordingly

Preparation

- select the desired motif from the selection menu of the embroidery computer
- the motif appears on the Edit screen

Adding motifs

- touch «Add Motif»
- touch desired motif or letter/character from the selection menu
- the selected motif will be added to the previous one

Duplicating a motif

- touch «Duplicate Motif»
- the active motif is duplicated and the duplicate added on top of the active motif is slightly offset

Duplicating a combination

- touch «Duplicate Motif»
- the active combination is duplicated and the duplicate appears on top of the active combination is slightly offset
- in contrast to the motifs in the original combination, the individual motifs in the duplicate cannot be selected anymore

Lettering (e.g. words) can be combined with other lettering or embroidery motifs.

The individual words in a sentence (e.g. Nothing Sews Like A Bernina. Nothing.) are individually combined by the line and positioned individually.

Create Lettering

- select desired alphabet type in the Selection menu
- a special screen with a keyboard appears
- enter Nothing Sews
- select letters using the Upper/Lower Case icon; place the space with the bar under the keyboard
- confirm combined letters with ✔ and lettering appears on the Edit screen

Positioning

- select the large embroidery hoop (Large Oval) with the Hoop Select icon
- rotate text by 90° (text has more space in the embroidery hoop)
- position text with the «Move Motif» function
- if a stitch of a motif is positioned outside the stitch area, the outline of the hoop is displayed in red

Further Text Lines

- in the Edit screen touch the «Add Motif» icon
- combine and position individually the rest of the text
- ensure the distance between the lines is the same – when positioning the lettering pay attention to the numbers in the Information Areas of the «Move Motif» icon and activate the «Show Grid» function

Motifs and Lettering

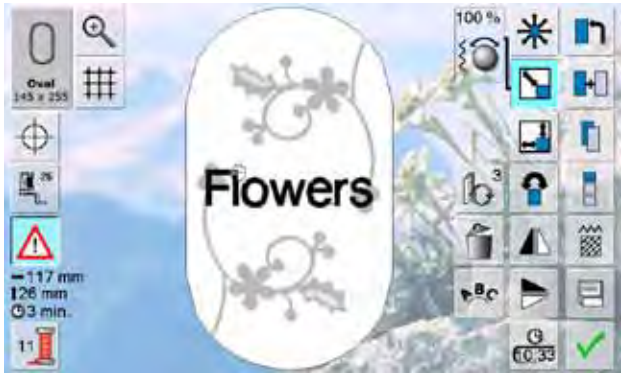

Depending on the application, the characters are added after an embroidery motif is selected or the characters are combined first and then added to the motif (e.g. embellished lettering).

Example:

- select desired embroidery motif in the embroidery computer
- the embroidery motif appears in the Edit screen
- touch the «Add Motif» icon
- select the desired alphabet type in the Selection menu of the embroidery computer
- a special screen with keyboard appears
- enter lettering (e.g. Flowers)
- select characters with help of the Lower/Upper Case icon
- confirm combined lettering with ✓ and lettering appears in the Edit screen above the motif

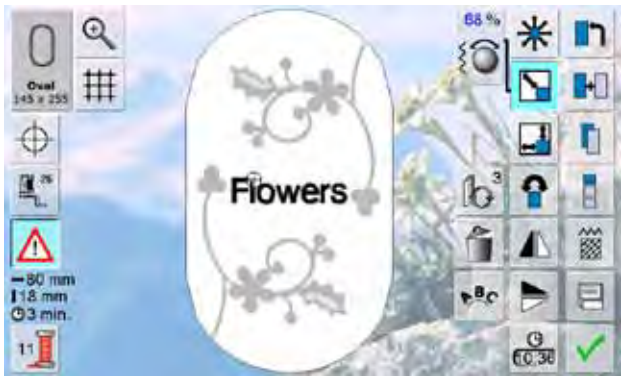

Altering Text to Suit Motif

- alter text size to suit motif with the function «Rescale motif proportionally»
- position the text as desired with the function «Move motif»

Properties

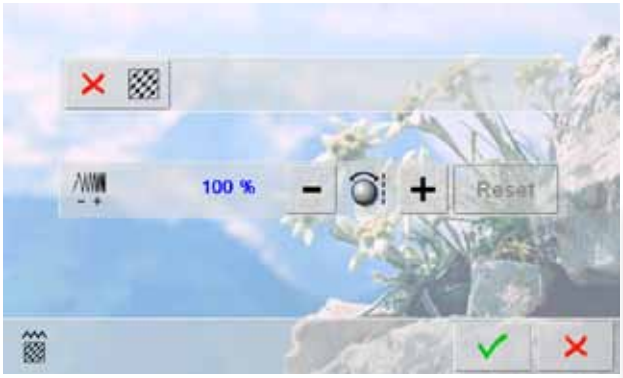

- change the stitch type
- change the stitch density

- the basic setting of the step stitch (fill stitch) is activated by touching the icon «Change Stitch Type»

If the motif is enlarged substantially, long satin stitches occur, tunneling the fabric.
In this case, it is recommended to switch to the step stitch fill.

Fill Stitch Type

The embroidery motifs are filled with satin or step stitches.

Satin Stitch

- the needle swings from one side to the other (tight zigzag)

Step Stitch (Fill Stitch)

- the needle stitches in straight rows at regular intervals (straight-stitching)

- touch the icon «Change Stitch Type»
- the satin stitch fill changes to a maximum of 8mm long step stitches fill (basic setting)
- touch the «+ /-» icon or turn the stitch width knob clockwise/counterclockwise and the maximum step stitch length is increased/decreased
- the maximum stitch length is 12.7mm
- touch ✔, the selected step stitch length is saved and the Edit screen appears
- touch the «Reset» icon, basic setting (8mm) is activated
- to fill the motif with satin stitches again, touch the «Change Stitch Type» icon again

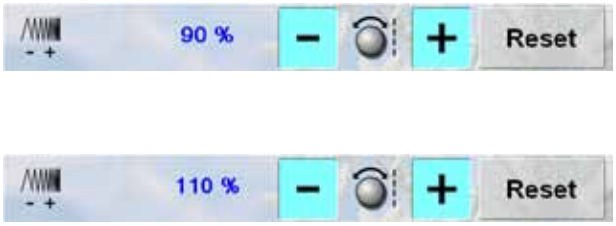

Altering Stitch Density

- touch the «–» or «+» icon or turn the stitch length knob counterclockwise/clockwise = the stitch density is reduced (fewer stitches)/increased (more stitches)
- touch the ✔ icon = the selected stitch density is saved and the Edit screen appears
- touch the «Reset» icon = the Basic Settings (100%) of the motif are activated again

Reallocating Motif Colors

- touch the Color number icon in the Edit screen
- the Color Information bar appears
- the following information is displayed:

1 Display of the current color
2 Position of the current color
3 Number of all colors
4 Color number of the thread brand selected

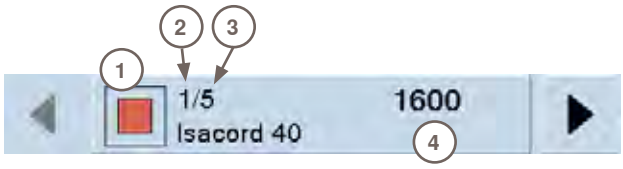

- scroll with the arrows to the color to be altered
- touch the Color Information bar
- special screen for changing the current thread color appears
- change the thread brand = scroll with the arrows to the thread required brand
- touch the «Thread Brand» icon = change the thread brand in the screen and the new thread details appear
- change the thread color = scroll through the thread colors with the arrows until the desired bar color appears and touch the color. Or, as an alternative, touch the «0-9» icon and enter the thread code directly using the keyboard
- the screen changes and the altered thread color is displayed in the Color Information bar

Embroidering Motifs in One Color

- touch the «Single/Multi Color Motif» icon in the embroidery menu
- «Single/Multi Color Motif» is activated
- the embroidery computer does not stop before motif is completely stitched

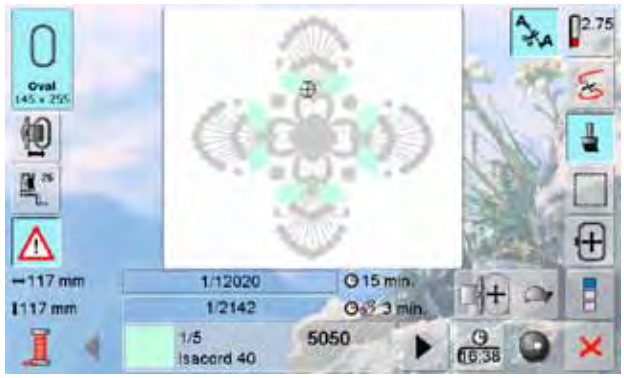

Embroidering the Motif by Color

- the «Reduce Color Changes» icon is inactive (default, gray)
- the number of color changes in a motif isn't reduced, the embroidery sequence remains as set originally
- the number of color changes remains higher than might be necessary

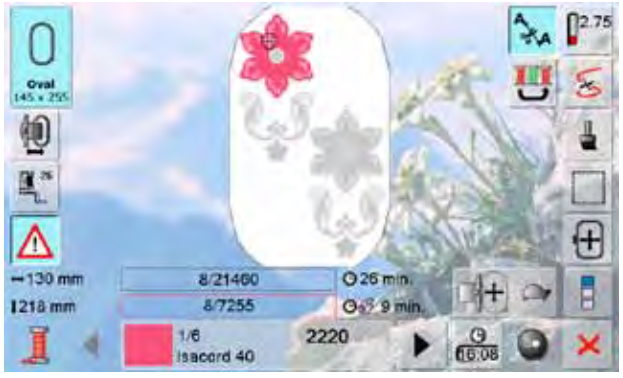

Reducing Color Changes

- touch the «Reduce Color Changes» icon
- the sections with identical colors are resequenced and combined to form «color blocks»
- this reduces the number of color changes to a minimum

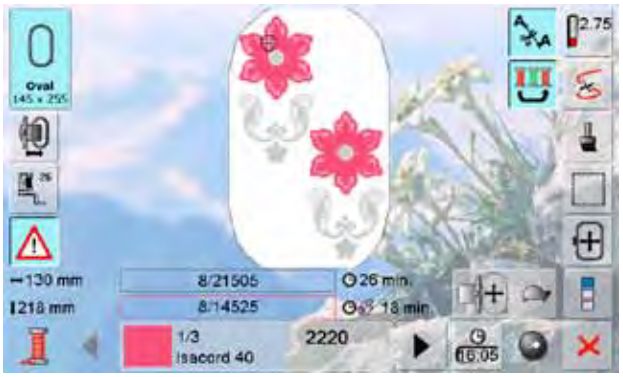

Embroidering Lettering in Multi Colors

- lettering is always displayed in one color (Single motif icon is not displayed)
- to embroider each letter of a word or each word of a word combination in a different color, each letter or word must be programmed and placed separately
- the embroidery computer stops after each letter or word and the thread color can be changed
- the stitching time for each color is displayed
- to embroider the complete lettering combination in one color, touch the Single/Multi Color Motif» icon (now active)

Basting Box

- the pattern is first basted with long straight stitches
- this serves as an additional anchoring of the project so that the fabric and stabilizer are adhered

- touch icon again – the icon changes

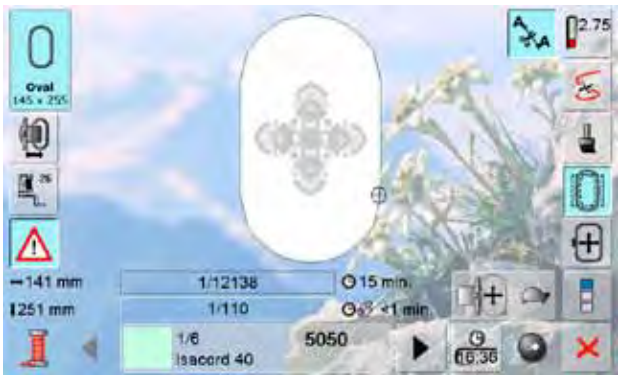

- the basting is now done along the hoop
- touch icon again to switch off the basting box function, otherwise it'll remain active even after selection of a new motif

Motifs

Embroidery motifs from the embroidery computer, the USB stick, embroidery cards or Designs created in the BERNINA Embroidery Software and the last active stitch pattern can be combined, re-arranged and altered in different ways, then saved.

Embroidery motifs can either be saved in the embroidery computer memory or on an empty Personal Design Stick.

In a saved stitch combination the individual stitch patterns can be altered after being selected.

Embroidery motifs which were altered in size and saved are regarded as new motifs when they are recalled. All percentages are given as 100% and the former alteration can no longer be seen.

Embroidery Computer Memory

- select desired embroidery motif
- alter or combine if necessary
- touch the «Save» icon in the Edit screen

- the motif to be saved is displayed as «New» on the left of the display
- in the Selection Menu the «Embroidery computer» icon is activated
- the «My Designs» folder is opened automatically
- the System Memory Capacity (free capacity) is displayed in percent (%) in a bar in the top right
- select the motif to be saved
- the embroidery motif is saved in numerical order in the «My Designs» folder
- the Edit screen appears again

USB-Stick

- the motif to be saved is displayed as «New» on the left of the display
- insert the USB stick
- touch «USB Stick» icon in the Selection Menu
- the System Memory Capacity (free capacity) is displayed in percent (%) in a bar in the top right
- select the motif to be saved
- the embroidery motif is saved on the USB stick

Blank USB sticks are available as a special accessory from your BERNINA dealer.

Overwriting Motifs

- motif stored in the memory or on a USB stick can be directly overwritten with a new motif
- create the desired embroidery motif
- touch the «Save» icon in the Edit screen

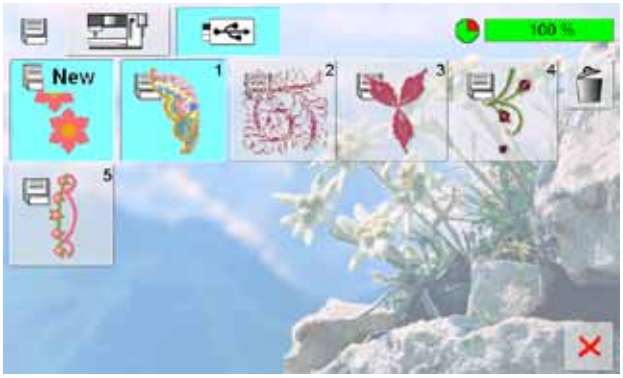

- the motif to be saved appears as «New» in the left of the display
- in the Selection Menu select the «USB Stick» icon (USB Stick is inserted) or «Embroidery computer»
- touch the embroidery motif which is to be overwritten

- confirm the animated graphic which appears with ✔
- the embroidery motif is now saved in the previously selected area

Delete a Saved Motif

- in the Selection Menu select the USB Stick icon (USB Stick is inserted) or «Embroidery Computer» and the folder «My Designs»
- touch the «Delete» icon 1

- select the motif to be deleted in the opened screen 2

- confirm the animated graphic which appears with ✔ 3
- the motif is deleted
- cancel deleting with ✘, the previous screen appears

Delete all Saved Motifs

- it is possible to delete the content of a personal design stick or the folder «My Designs» all at once
- touch «Setup»
- touch «Reset»
- a summary of the screen appears

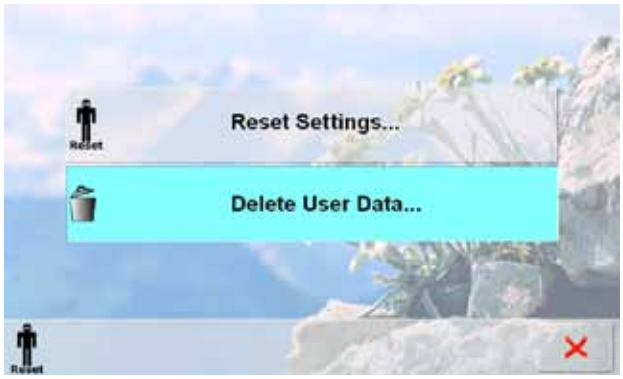

- touch «Delete User Data»

- in embroidery two choices are possible:
  - My Designs
  - Memory Stick (the stick must be plugged into the embroidery computer)
- touch the button of which the data should be deleted

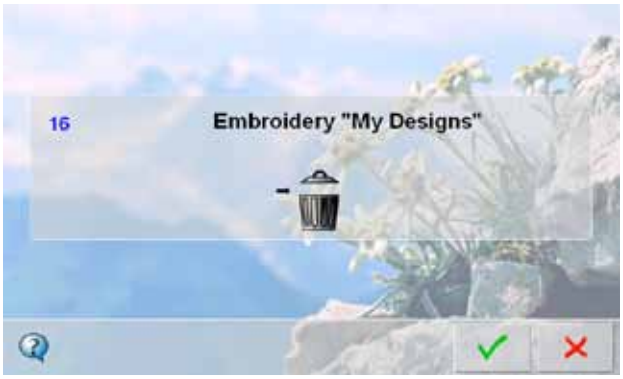

- confirm the appearing display message with ✓
- the data is deleted and the screen reverts to the previous screen
- to cancel this process touch ✗

Selecting the Embroidery Hoop

Edit Screen

- select an embroidery motif from the various choices of motifs
- the screen «Edit» appears

- the selected embroidery motif is shown in the most appropriate (smallest possible) hoop
- the «Hoop» on-screen button shows which hoop should be attached
- attach the recommended hoop

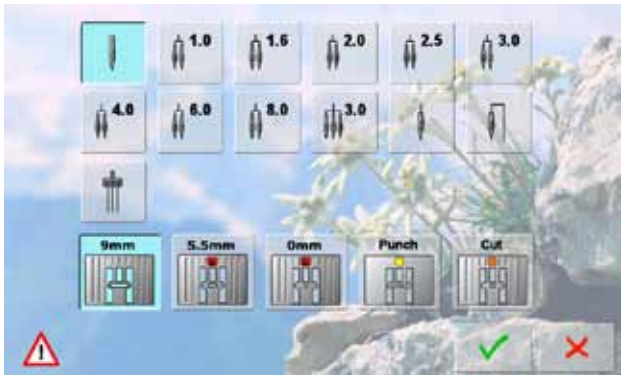

Needle/Stitch plate selection

According to the use (e.g punching) the suitable needle resp. stitch plate icons can be selected in the security program.

- press function „Security program“
- select the desired needle resp. stitch plate icons
- touch ✔ to confirm
- the necessary security settings are made

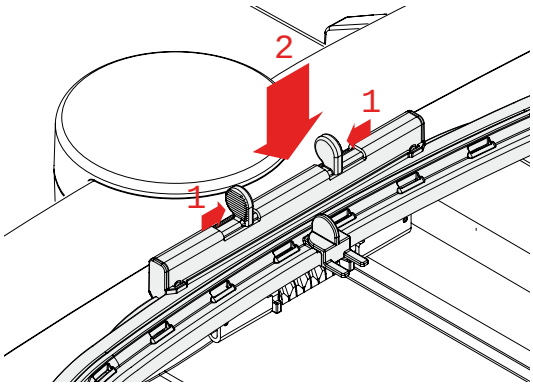

Attaching the Embroidery Hoop

Raising Needle and Embroidery Presser Foot

- raise needle and embroidery presser foot
- hold the hoop with the right side of the fabric up and the attaching mechanism to the left

Attaching the Hoop

- pass the hoop under the embroidery presser foot
- squeeze the ends of the attaching mechanism on the side of the hoop
- position the center points of the hoop (small attachment clamps) over the bracket of the embroidery arm
- push the hoop down until it engages
- release the attaching mechanism of the hoop

Removing the Hoop

- press both ends on the hoop attaching mechanism towards each other
- pull up to remove the hoop

Starting to Embroider

- touch ✔ or press the Start-Stop-button on head frame
- embroidery computer moves to check if hoop is attached

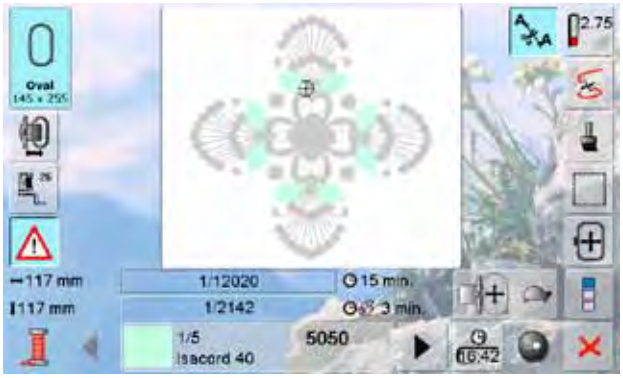

Embroidery Menu

- the Embroidery menu opens with the embroidery motif
- the embroidery motif is ready to be embroidered

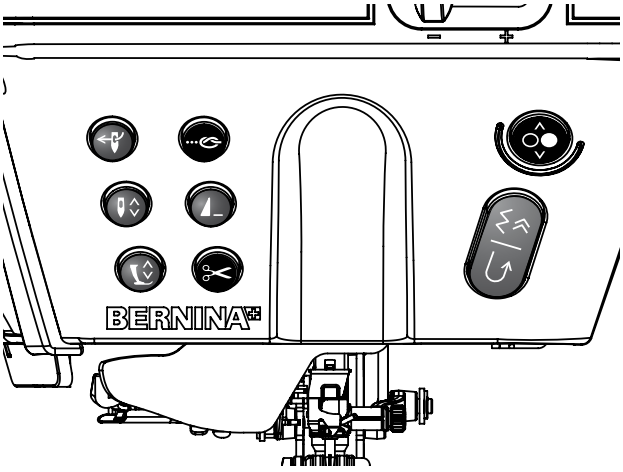

Starting to Embroider With the Start-Stop-Button on Head Frame

- keep the Start-Stop-button on the head frame depressed until the embriodery computer starts
- the embroidery computer sews approximately 7 stitches and stops automatically
- a screen indicates that the thread tail has to be cut at the beginning of the motif
- raise the presser foot
- cut the thread tail at the beginning of the motif
- press the Start-Stop-button on head frame to resume embroidering

Interrupting With the Foot Control

- when the embroidery computer is embroidering, press the Start-Stop-button on head frame or tap the foot control lightly
- the embroidery computer will stop immediately

Completing the Color

- press the Start-Stop-button on head frame or the foot control again
- the embroidery computer embroiders all the sections in the color activated
- the embroidery computer stops automatically when complete
- both threads are automatically cut

Starting to Embroider With Foot Control

- press the foot control
- the embroidery computer stops automatically after approx. 7 stitches
- a screen indicates that the thread tail has to be cut at the beginning of the motif
- release the foot control
- raise the presser foot
- cut the thread tail at the beginning of motif
- when embroidering with the foot control always keep it depressed

Changing Color

- the embroidery computer is automatically ready to embroider the next color
- change color of the upper thread accordingly
- embroider with the new color

Embroidery Screen

- after starting to embroider the Embroidery screen appears

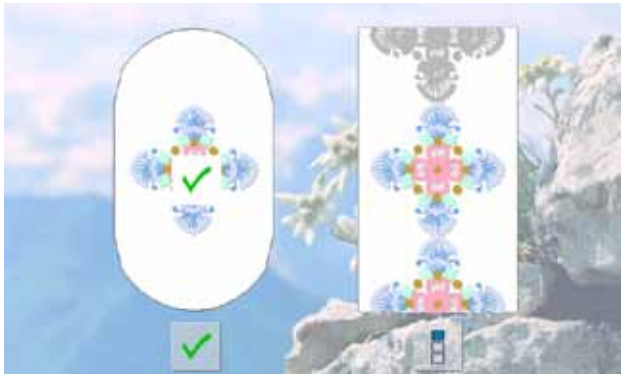

End of embroidery

- after completing the motif touch the ✔ icon to finish the embroidery process, or touch the «Endless Embroidery» icon again to repeat the border embroidery

Thread Breakage when Embroidering

The upper or lower thread may occasionally run out or break when you are embroidering. When this happens, the embroidery computer stops automatically, provided that the thread and bobbin indicators switched on in the setup program.

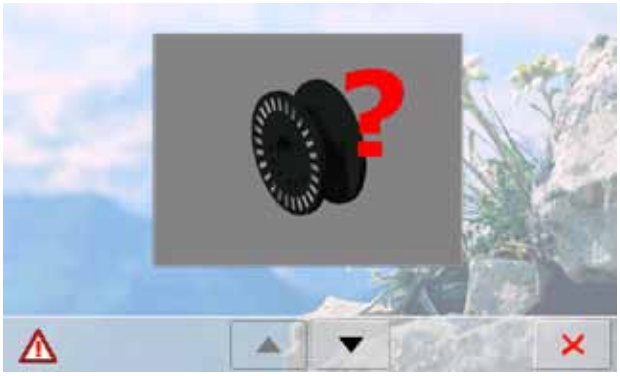

Upper or Lower Thread Breaks

- the embroidery computer stops automatically
- an animation is displayed
- use the arrow buttons to toggle between lower-thread and upper-thread message
- check lower thread; refill or rethread bobbin

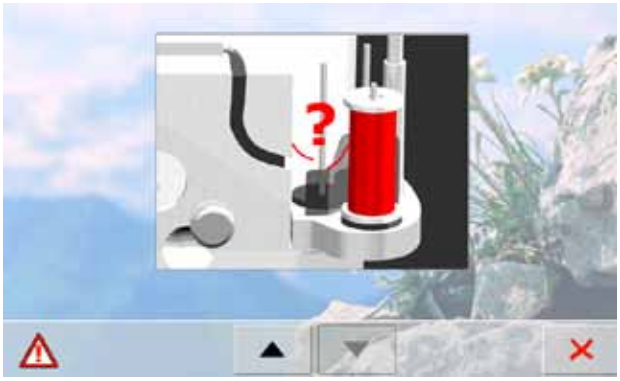

- check upper thread; rethread needle
- touch ✕

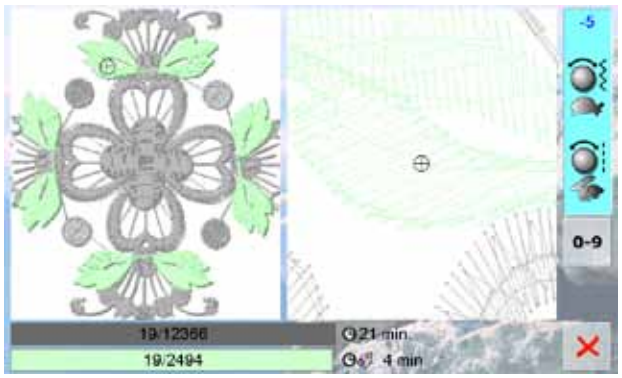

Embroidery Sequence Control when Thread Breaks

- a special screen opens
- motif appears in original size on the left-hand side of the screen and in an enlarged view on the right
- this makes it easier to check the embroidery sequence
- the information area for operating the stitch width and stitch length knobs is displayed
- turn knobs counterclockwise (or clockwise, the hoop is moved backwards (or forwards) in the embroidery sequence
- turn stitch width knob slowly, hoop is moved stitch by stitch
- turn stitch length knob, hoop is moved in large steps (approx. 50 steps)
- the number in the information area shows the number of stitches in the embroidery sequence
- use the «0-9» field to go directly to a stitching position
- position the needle back far enough so that it will resume stitching several stitches before the thread breakage
- to return to original position, touch information area
- touch ✕ to close the special screen

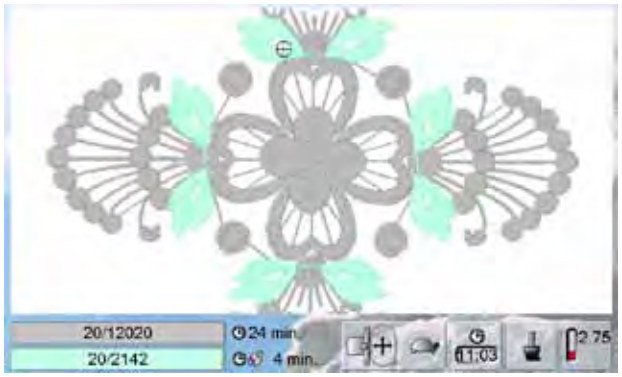

Resuming Embroidering

- to continue embroidering, touch the start-stop-button or press the foot control

Selecting Individual Motifs

Select motif no. 20 from the general category and mirror horizontal (right/left).

Combining Motifs

Combine various motifs and embellish with lettering, or create the lettering first and then embellish with patterns.

Alphabets

- 18 different alphabets for giving your embroidery projects an individual touch are available in the embroidery computer
- 16 alphabets can be used horizontally or vertically, while 2 can only be used horizontally

WordArt

- use the stitch width knob to change the distance between the letters in mm steps (max. 5cm)
- use the stitch length knob to change the arc of the lettering

Importing Stitch Patterns into Embroidery Mode

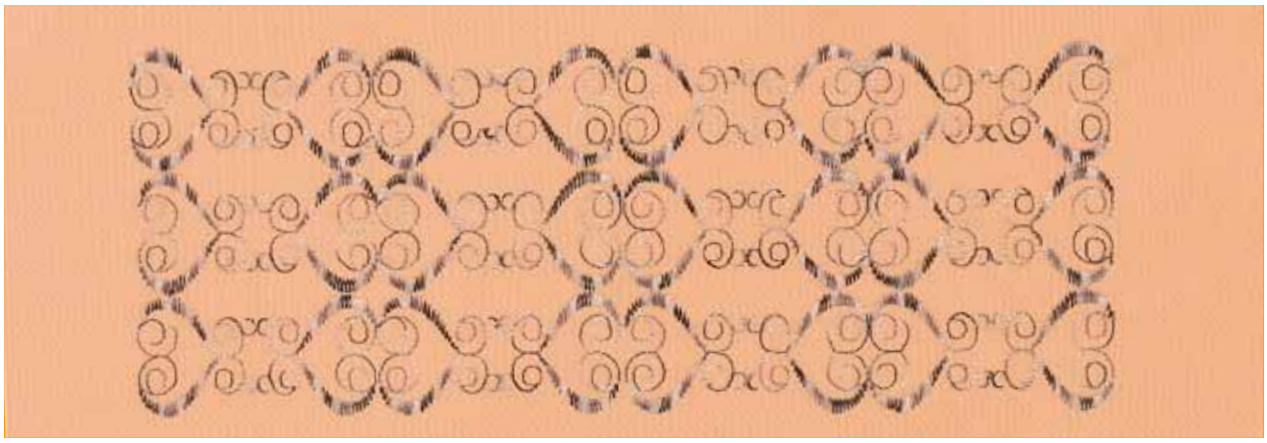

- Stitch patterns can be imported from sewing mode into embroidery mode, and edited like embroidery motifs
- this makes it quick and easy to assemble, duplicate and mirror e.g. border patterns, and finally to save them as embroidery motifs in the «My Designs» folder

Endless Embroidery

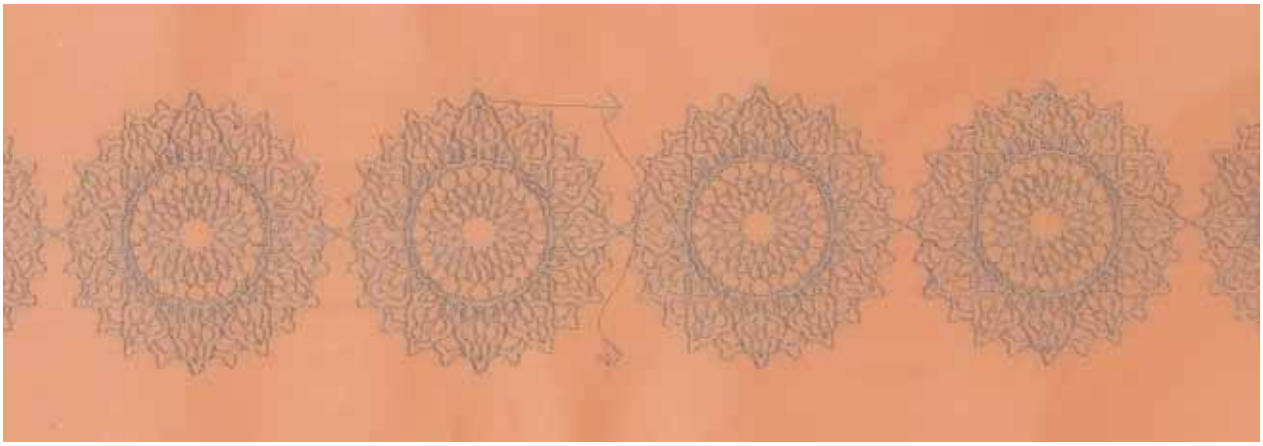

- create beautiful border designs with the «Endless Embroidery» function
- reference points are automatically added. Table linens, curtains and garment hems can be embroidered with pattern rows of any length
- rehooping is simple and precise

Reference points are the default setting. When doing vertical endless embroidery, only 2 reference points are needed.

- if you are adding motifs below the motif then the left and right reference points are needed
- if you are going to the right, the 2 left reference point are needed
- upper to add motifs in an other direction, set 2 reference points
- after the motif embroiders, the reference points are stitched. Rehoop matching the reference point. Stitch and continue until all motifs are sewn

Mega-Hoop

- the Mega-Hoop provides an embroidery area of 150mm x 400mm
- large embroidery designs, motif combinations and border patterns can be embroidered easily and without rehooping
- designs are not split but embroidered as one unit, spanning the field of the hoop
- use the template included for successful placement

Jumbo-Hoop

- the Jumbo-Hoop provides an embroidery area of 250mm x 400mm, which enables you to embroider extra-large embroidery designs, motif combinations and border patterns
- the fabric-clamping device and the inner hoop offer outstanding stability for fabric and stabilizer
- use the template included for successful placement

With some Jumbo Hoop embroidery designs, the hoop appears in red on selecting it.

- select «Move Motif», then use the stitch width and stitch length knobs to move the motif until it fits into the hoop entirely

Maintenance Troubleshooting

Maintenance 168
Cleaning 168
Cleaning the stitch plate and the hook 168
Cleaning the automatic thread cutter 168
Lubricants 168
Cleaning the Screen and the Sewing Computer 168
Changing the Battery for digital Clock 169
Environmental Protection 169
Troubleshooting 170
Avoiding and Solving Problems 170
General Messages 174

Cleaning

Cleaning the stitch plate and the hook

Remove thread remnants and lint from under the stitch plate.

- remove presser foot and needle
- press the stitch plate down at the back right corner and remove
- open bobbin cover door
- remove the bobbin
- clean the stitch plate and the lower thread indicator with the lint brush or use a vacuum cleaner

- clean the hook and hook race with the lint brush. Do not use sharp instruments for cleaning!
- insert the bobbin
- close the cover
- replace the stitch plate

Cleaning the automatic thread cutter

- see page 45

Lubricants

- open bobbin cover door
- with your left hand, hold the bobbin-case; with your right hand, turn the hand wheel clockwise until the hook race is visible
- apply a tiny amount of universal sewing machine oil in the hook race
- close bobbin cover door
- briefly run the sewing computer in idle, so sewing project is not soiled

Cleaning the Screen and the Sewing Computer

- wipe with a soft, damp cloth

Turn power switch to «0» (off) and remove plug from electrical outlet when performing maintenance. Never use alcohol, petrol, white spirit or any type of solvent to clean the sewing computer.

Changing the Battery for digital Clock

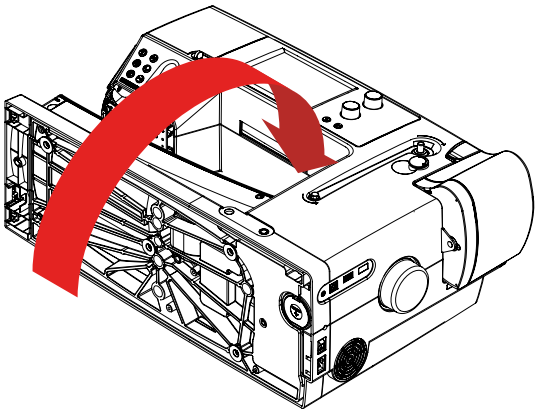

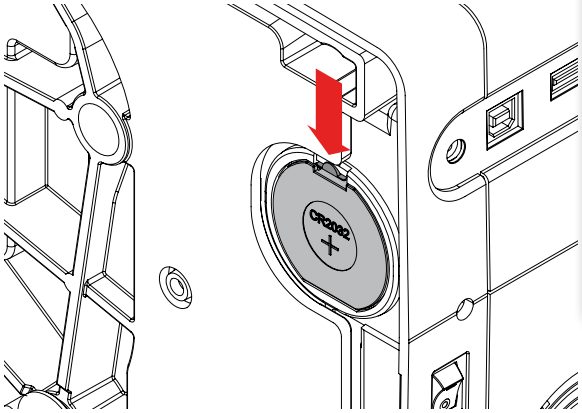

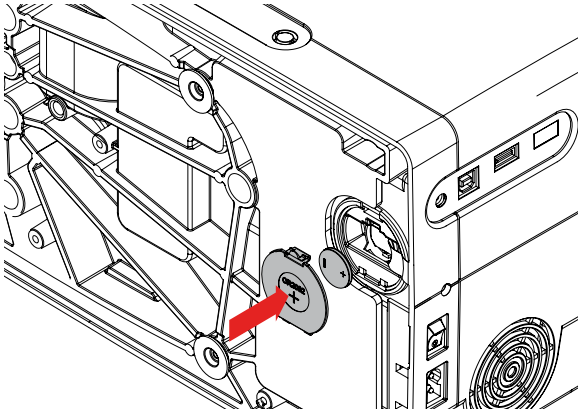

- only use a 3V coin cell battery, CR 2032. Use of another battery may present a risk of fire or explosion
- lie sewing computer on its back
- remove the battery compartment cover
- open the lock for the battery with a small screwdriver and remove it
- insert the new battery and press down at the back until the lock snaps into place
- close the battery compartment

The battery used in this sewing computer may present a risk of fire or chemical burn if mistreated. Do not recharge, disassemble, heat above 100 °C (212 °F), or incinerate.
The battery should not be in reach of children. Do not use rechargeable batteries. Do not throw batteries into fire. Explosion hazard. Do not throw batteries into ordinary household waste; they should be placed in the public waste collection system.

Environmental Protection

BERNINA is committed to the protection of the environment. We strive to minimize the environmental impact of our products by continuously improving materials used and our technology of manufacturing.

At end of life please dispose this product in an environmentally responsible way in accordance to the national directive. Do not throw away this product with your household waste. In case of doubt please contact your dealer.

Some failures may be remedied by switching the sewing-/embroidery computer off, then on again after 10 seconds.

Fault	Cause	Repair
Uneven stitch formation	Lower thread incorrectly threaded Upper thread incorrectly threaded Poor quality needle or bent Upper thread too tight/too slack Poor quality thread Lower thread too tight/too slack	Check lower threading path Check upper threading path Use a new, good quality needle (BERNINA) Reduce/increase upper thread tension Use quality threads (Isacord, Mettler, Gütermann) Reduce/increase lower thread tension
Skipped stitches	Incorrect needle system Needle bent or blunt Needle/thread combination is incorrect Needle inserted incorrectly Incorrect needle point Poor quality needle	Use needle system 130/705 H Use new, good quality needles (BERNINA) Match the needle to the thread size, see page 26 Insert needle as far up as it will go Match the needle type to the fabric Use good quality needles
Upper thread Breaks 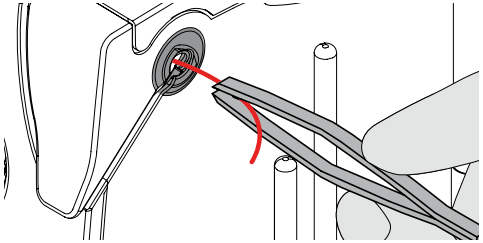	Upper thread tension too tight Incorrectly threaded Poor quality or old thread Stitch plate or hook tip damaged	Reduce upper thread tension Check upper thread threading path Use good quality thread Have the sewing-/embroidery computer checked by a dealer Remove any remaining threads in the pre-tension with tweezers and check the take up lever, see page 172
Lower thread breaks	Lower thread tension too tight Stitch hole in the stitch plate has been damaged Needle blunt or bent	Reduce lower thread tension Have the sewing-/embroidery computer checked by a dealer Use a new needle

Fault	Cause	Repair
Needle breaks	Needle not correctly inserted Fabric is pulled Fabric was pulled when thick material used Poor quality thread with knots	Tighten the needle clamp screw Do not pull the fabric during sewing Use the correct presser foot for thick material (e.g. Jeans foot No. 8); use height compensating tool when sewing over a thick seam Use quality thread
Faulty Stitching	Remnants of threads between the tension discs of upper thread tension	Raise presser foot. Pull folded, thin fabric (do not use fabric edge) between the tension discs and clean them by moving the fabric sideways over the front and back of the thread tension disc
Screen does not respond	Calibration data incorrect ECO function switched on	Re-calibrate the screen in the Setup Program Turn off ECO function
Sewing computer fails to run or runs slowly	Plug not properly inserted Sewing/embroidery computer is kept in a cold room Sewing computer is not switched on	Insert plug properly Place it in a warm room for 1 hour before use Turn on sewing computer (to «I»)
LED on the key does not light up	LED defective ECO function switched on	Have the sewing-/embroidery computer checked by a dealer Turn off ECO function
LED sewing light and free-arm light do not light up	LED defect ECO function turned on	Have the sewing-/embroidery computer checked by a dealer Turn off ECO function
Attached presser foot not recognised	Sensors (of presser foot, sewing computer) may be dirty	Clean sensors with a soft, slightly damp cloth

Fault	Cause	Repair
Lower thread indicator does not respond	Bobbin damaged or defective Monitoring function is deactivated Defective sensors	Check bobbin or replace if required Activate monitoring functions in the Setup Program Have the sewing-/ embroidery computer checked by a dealer
Update error	USB stick is not recognized Update process is at a standstill (hour glass remains)	Use a BERNINA USB stick Remove the stick and turn the sewing computer off and on again. Proceed with the update as indicated by the message
Thread is caught in the area of the take-up lever 	Upper thread breaks Upper thread slipped unvisibly back into the sewing computer and wrapped itself around the thread take-up lever	► Cut thread near bobbin Remove the cover to the left of the screen as follows: ► with your left hand, insert the multifunction tool in the slot on the left side of the cover and press the lock ► with your right hand remove the cover facing the front ► carefully remove thread remnants from the thread take-up lever/regulator with tweezers ► put on cover and press down at the back until it clicks into place

Fault	Cause	Repair
Automatic threading not possible	Double-needle limitation is on Defective sensors	Switch off the double needle limitation in Security Program Sewing-/embroidery computer checked by a dealer
Automatic thread cutter blocked	Thread remnants jammed in the thread Catcher	Under Cleaning in Setup Program, proceed as follows: ► touch field 1 ► thread catcher of automatic thread cutter moves to the right ► carefully remove thread remnants with the tweezers ► touch field 3 ► automatic thread cutter re-initializes and is ready for use

General Messages	Explanation	Repair
	Clean and lubricate sewing-/embroidery computer	► Open bobbin cover and remove bobbin ► Switch off sewing-/embroidery computer ► Remove presser foot, needle and stitch plate ► Clean sewing-/embroidery computer as indicated
	Deleting or overwriting data, e.g. Drawers	Confirm with ✓ or cancel with ✗

General Messages	Explanation	Repair
Congratulations! The automatic software update was successfully completed. We wish you many hours of enjoyment with your new BERNINA.	Update successful	The sewing computer has been provided with the latest software version
	Winding the bobbin	Wind bobbin as shown in the animations
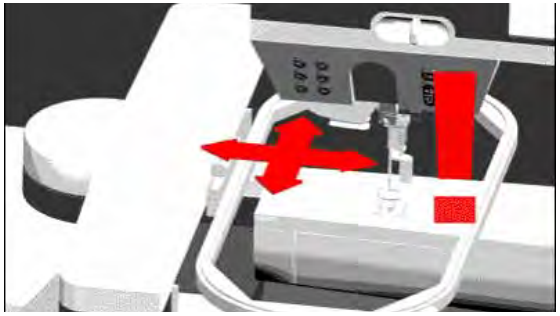	The hoop moves	Confirm with ✔

General Messages	Explanation	Repair
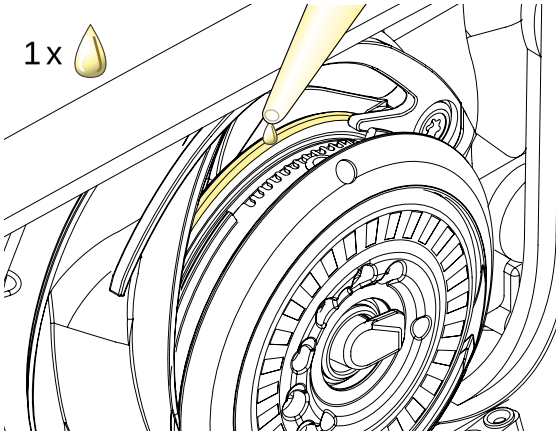	The sewing-/embroidery computer requires cleaning/ lubrication.	To ensure that the sewing-/embroidery computer can operate at highest performance further on, it is time to remove lint and any thread and fabric remnants from under the stitch plate and around the feed-dog. This message appears after approx. 500,000 stitches. Close the message after cleaning/lubricating by touching the ✔ field. The message can be deleted temporarily by touching the ✕ field but will reappear when the sewing-/ embroidery computer is next restarted. After the third deletion with ✕ the message will not reappear before another approx. 500,000 stitches will have been stitched.
		After oiling bring the hook in the pictured position (see on the left) by turning the handwheel clockwise for correct threading.

General Messages	Explanation	Repair
It's time for your regular service. Please contact your BERNINA dealer for an appointment!	It is time for the scheduled, regular servicing. Please contact the BERNINA dealer/servicing to make a servicing appointment.	The sewing-/embroidery computer must be taken to an authorised BERNINA dealer/servicing shop. The message appears after approx. 3,000,000 stitches. Once the servicing has been performed by an authorised BERNINA dealer/ servicing shop, the stitch counter is reset to «0» (zero) and the message disappears. The message can be deleted temporarily by touching the ✕ field but will reappear when the sewing-/embroidery computer is next restarted. After the third deletion with ✕ the message will not reappear until the next reminder at approx. 6,000,000 stitches (in total). When the third message appears at 9,000,000 stitches (in total) servicing is imperative. The message reappears after each restarting of the sewing-/ embroidery computer. Having your sewing/embroidery computer cleaned and serviced properly at the appropriate times ensures its proper functioning and long service life. Failure to do so may adversely affect service life and limit the guarantee. The charge for servicing is nationally regulated – consult your dealer or servicing shop for details.

Error Message	Explanation	Repair
	Stitch number not known in direct entry	Check command entered and enter a new number
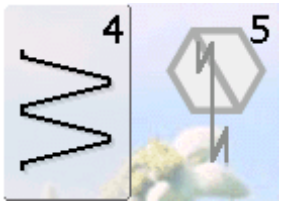	Stitch selection not possible in the combination mode	Make another selection
	Thread breakage	Check upper and lower threads
	Incorrect placement of bobbin	Place bobbin the other way round (white markings visible)

Error Message	Explanation	Repair
	Incorrect needle for the stitch plate selected	Check settings in securing program
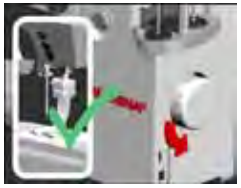	Needle is not in the highest position	Turn handwheel
	Main motor is not running	Remove any thread remnant from the hook area See also Blocked Hook on page 188
Not enough free storage space available for saving! Delete a few Designs to free up storage space.	Insufficient memory space in the sewing-/embroidery computer for the function selected	Reduce memory storage in Sewing Memory Reduce memory storage in Personal Program Reduce memory storage in My Designs

Error Message	Explanation	Repair
Not enough free memory capacity on the BERNINA memory stick. Make sure that at least 10MB remain free on the BERNINA memory stick.	Less than 10MB free space on the USB stick	Delete data from USB stick
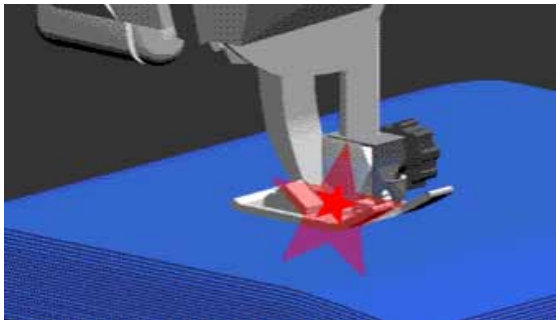	Too much fabric under presser foot	Reduce amount of fabric under presser foot
No personal data on the memory stick.	No personal data available on the USB stick	Check that the USB stick is inserted correctly and re-start the sewing computer
The recovery of personal data was unsuccessful.	During the update process personal data was not saved on the USB stick	The software was correctly updated. Personal data could not be recovered

Error Message	Explanation	Repair
Please insert the BERNINA memory stick. Make sure the same memory stick is inserted throughout the whole automatic software update process.	BERNINA USB stick is not inserted	Insert BERNINA USB stick and do not remove during the update process
The software update was unsuccessful.	New SW Version is not available on the stick	Save the new SW Version on the BERNINA USB stick and start the update again
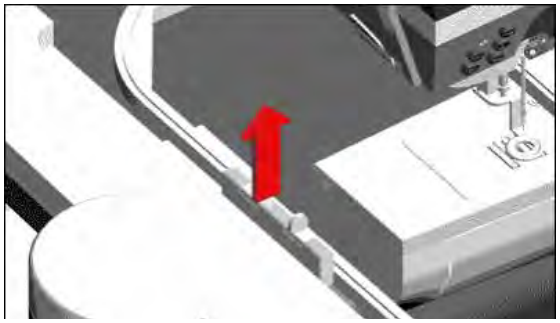	Embroidery hoop attached	Remove embroidery hoop
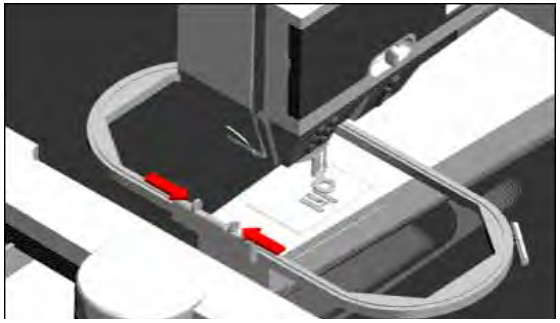	No embroidery hoop attached	Attach embroidery hoop

Error Message	Explanation	Repair
	Embroidery motif is partly outside the hoop	Re-position the embroidery motif. The section inside the hoop can be embroidered. The red outline will disappear
	Embroidery motif is too large	Reduce the size of the embroidery motif or attach a larger hoop. The red line will disappear
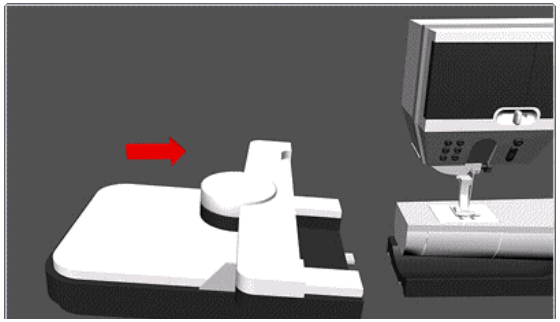	Embroidery module has not been attached yet Embroidery module has not been correctly attached	Connect the embroidery module to the sewing computer Check the embroidery module connection

Error Message	Explanation	Repair
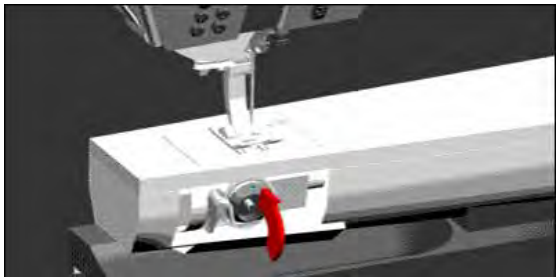	Bobbin cover not closed	Close bobbin cover slowly
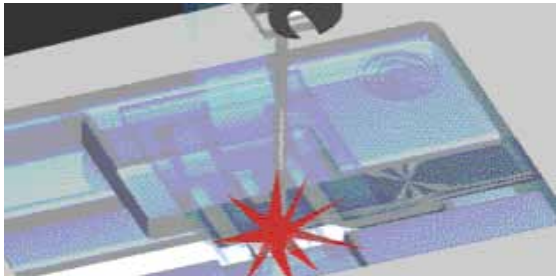 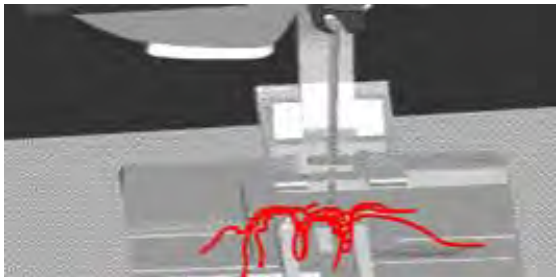	Automatic Thread Cutter button touched and needle is blocked in lowest position	► Switch sewing-/embroidery computer OFF ► Turn handwheel clockwise until needle is in highest position ► Remove stitch plate ► Remove thread remnants ► Refit stitch plate, then switch sewing-/embroidery computer ON

Error Message	Explanation	Repair
	Lower sensor is activated	Check bobbin and refill if required
	Upper thread run out	Attach fresh thread spool and threading
	Incorrect presser foot for BERNINA Dual Feed switched on	Attach a «D» presser foot

Error Message	Explanation	Repair
 	Sideways motion pattern selected and BERNINA Dual Feed switched on	Switch off BERNINA Dual Feed or select other stitch pattern and attach appropriate presser foot
	Bobbin isn‘t inserted	Insert bobbin
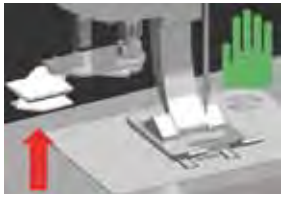	Threader doesn‘t move to starting position	Carefully raise threader manually

Error Message	Explanation	Repair
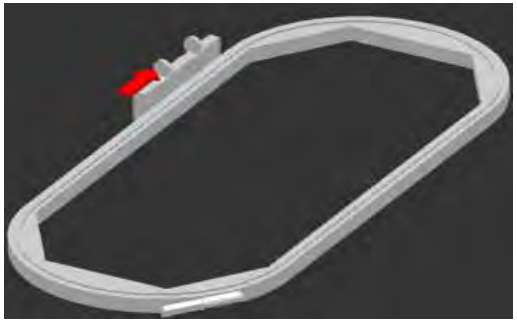 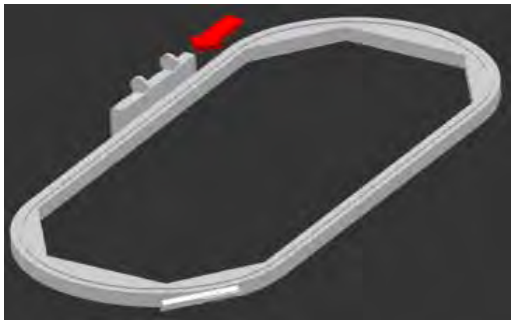	The embroidery process cannot proceed	Move Mega-Hoop to center position and resume embroide-ring

Error Message	Explanation	Repair
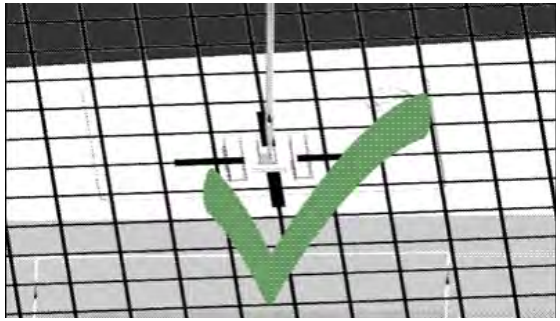	Needle position doesn‘t correspond to center of hoop	Adjust according to User Instructions page 40
	Contact between embroidery computer and embroidery module is interrupted due to vibrations	Reconnect embroidery module and switch off and on the embroidery computer

Error Message	Explanation	Repair
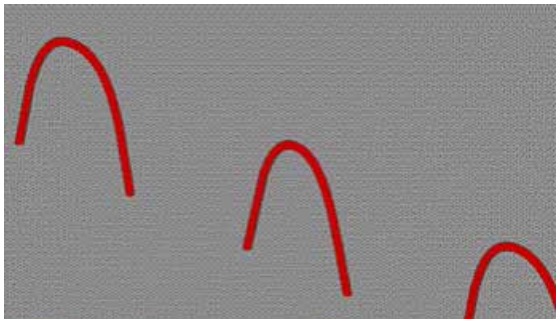 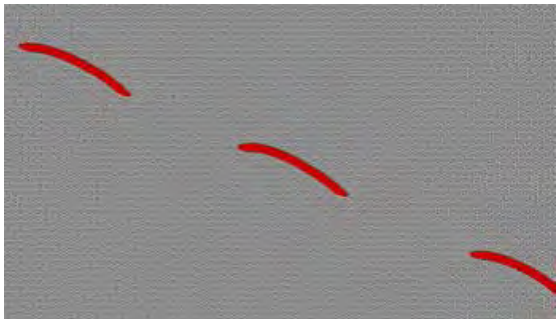	Loose loop formation while sewing	Adjust thread tension in Thread Tension screen

Error Message	Explanation	Repair
Thread blockage in the hook with the needle down 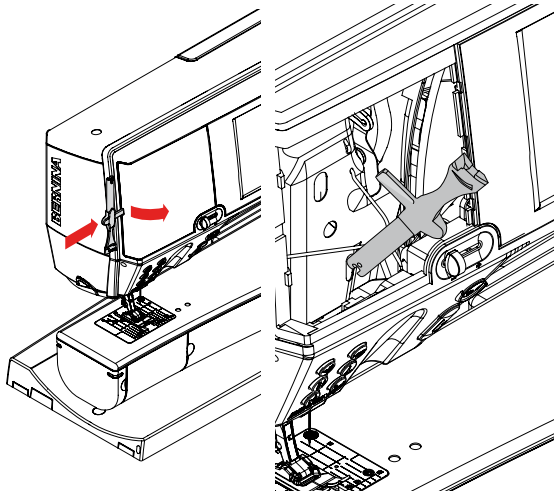	Thread is caught in the hook area	Remove the cover to the left of the screen as follows: ► with your left hand, guide the multifunction tool into the slot on the left of the cover and press the lock ► with your right hand, remove the cover to the front at the same time ► with the multifunction tool, disengage the needle bar ► remove the needle ► replace cover and press to back until it clicks into place ► further procedure see «blocked hook»
Blocked Hook 	Entangled threads in the hook system	The error messages listed here may be generated by various failures. Please follow this standard procedure in all the cases: Step 1 If the needle is not in its upmost position, raise needle by turning handwheel counterclockwise. If this doesn‘t work, cut upper thread, remove servicing cover and use the multifunction tool to release the needle bar and bring it up, see also «Thread blockage in the hook with the needle down». Step 2 Raise presser foot. Step 3 Use the scissors to cut the upper and lower thread above the stitch plate. Step 4 If bobbin door is not open, then open. Message «Manual mode for troubleshooting» appears with instructions. Step 5 Disconnect the foot controller. Step 6 Remove needle. Step 7 Swing hook out manually by turning the handwheel clockwise.

Error Message	Explanation	Repair
		Step 8 Try to turn the handwheel clockwise until the blockade is undone. Use considerable force if required. If this doesn‘t work, contact your BERNINA dealer. Step 9 Remove bobbin, cutting the thread if required. Step 10 Carefully remove any thread remnants with tweezers. If threads jam, slowly continue to turn hand wheel clockwise, pulling the threads out as soon as they come free. Step 11 Bring the hook in the pictured position (see on the left) by turning the handwheel clockwise for correct threading. Step 12 Insert bobbin. Step 13 Check the lower thread tension (see on the left) by comparing the position of the lug with the figure in the bobbin door. Step 14 Swing hook in **completely** by turning the handwheel counterclockwise, then close bobbin door. Step 15 Check the needle. If it is flawless, re-attach it. If is not, use a new needle. Step 16 Connect the foot controller again. Step 17 Confirm messages «Manual mode for trouble-shooting» and «Main motor is not running» or «Check hook system».

This tool may only be used for the application described!

Error Message

Blocked Hook

1

2

3

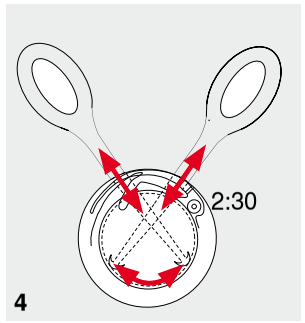

4

Repair

- cut the threads close to the stitch plate and remove the sewing project
- remove presser foot, needle and stitch plate
- open the bobbin door, the hook will swing out
- switch sewing computer off

- first use tweezers from the standard accessories and carefully remove the visible threads from the entire hook area (Fig. 1)
- hold bobbin case firmly with your left hand (see page 25 in the manual) and with your right hand turn the hand wheel to bring hook screw to the 2:30 position as shown Fig. 2
- carefully insert the tool into the opening, then pull the threads up and out by moving the tool sideways and upways (Fig. 3-4)
- after removing all thread bits, lubricate the hook, then switch on the sewing computer and close the bobbin door. The hook will reposition itself automatically

BERNINA Motifs

Sewing Stitch Categorys 192

Practical Stitches 192

Buttonholes 192

Decorative Stitches 192
- Florals 192
- Florals Sideways Motion 192
- Cross Stitches 193
- Satin Stitches 193
- Satin Stitches Sideways Motion 193
- Ornament Stitches 194
- Heirloom Stitches 194
- Heirloom Sideways Motion 194
- Novelty Stitches 195
- Novelty Sideways Motion 195
- Tassels 195
- Filigree Stitches Sideways Motion 195
- Quilt Stitches 196
- Tapering Stitches 196
- Skyline Stitches 196

Alphabets 197
- Block 197
- Double Block 197
- Script 198
- Quilting Text 198
- Comic Sans 199
- Monograms 199
- Kyrillic 199
- Hiragana 200
- Katakana 200
- Kanji 200

Embroidery Motifs 201

830 BERNINA Collection 201

Louisa Meyer 203

Susanne Müller 206

Diane Gaudynski 208

Alphabets 210

Practical Stitches

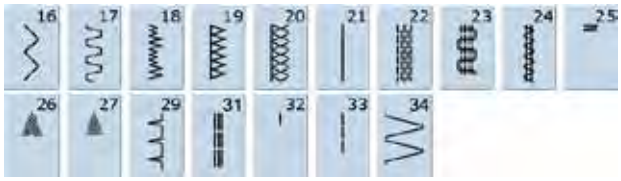

Buttonholes

Decorative Stitches

Florals

Florals Sideways Motion

Cross Stitches

Satin Stitches

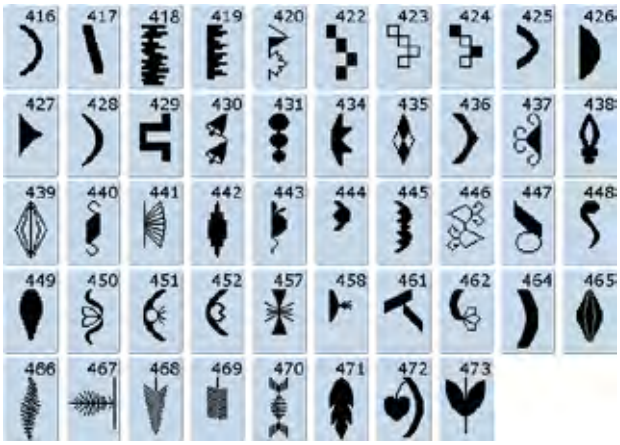

Satin Stitches Sideways Motion

Ornament Stitches

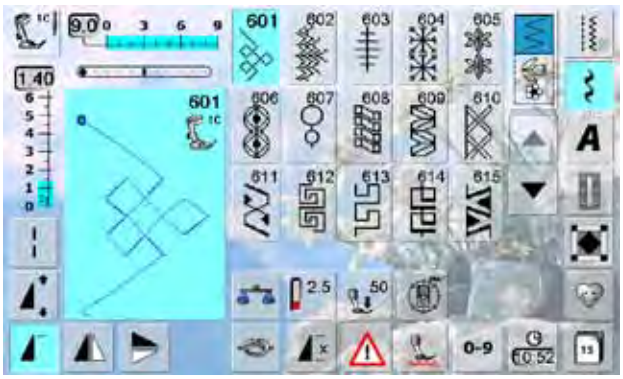

Heirloom Stitches

Heirloom Sideways Motion

Novelty Stitches

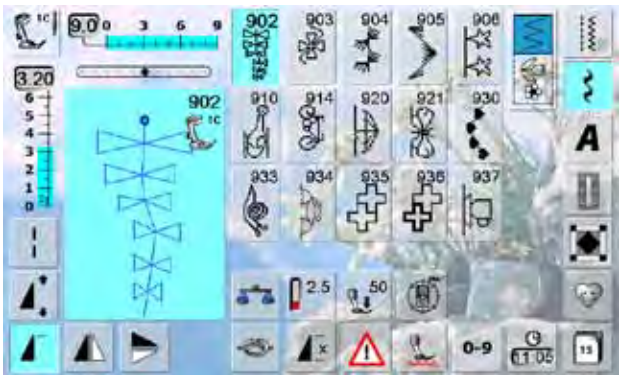

Novelty Sideways Motion

Tassels

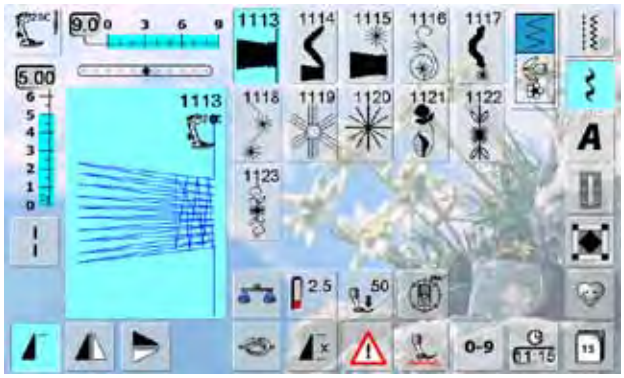

Filigree Stitches Sideways Motion

Quilt Stitches

Tapering Stitches

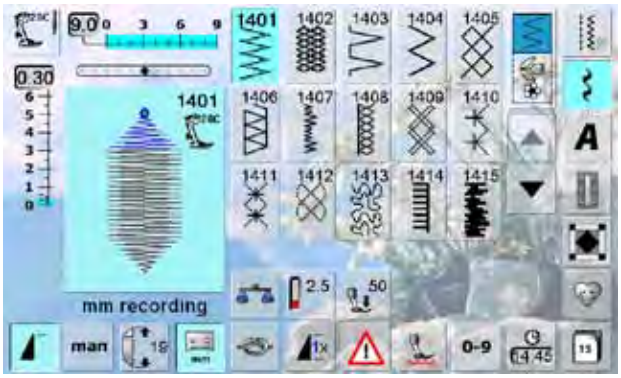

Skyline Stitches

Alphabets

Block

T U V W X Y Z Ä À Â
Å Æ Ç È É Ê Ñ Ö Œ Ø
Ü 1 2 3 4 5 6 7 8 9
0 _ - . ' ! + = & ÷
? % @ ( ) [ ]

t u v w x y z ä à â
å œ ç è é ê ñ ö œ ø
ü

Double Block

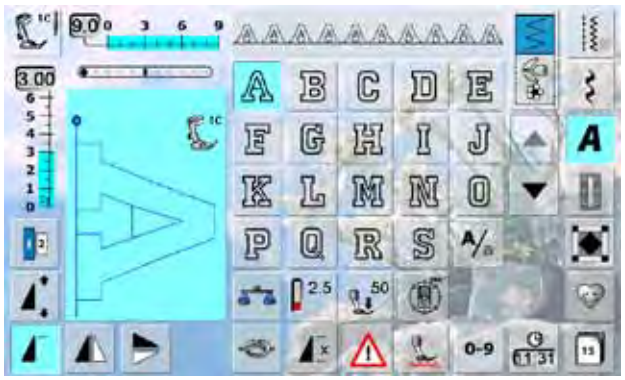

T U V W X Y Z Ä À Â
Å Æ Ç È É Ê Ñ Ö Œ Ø
Ü 1 2 3 4 5 6 7 8 9
0 _ - . ' ! + = & ÷
? % @ ( ) [ ]

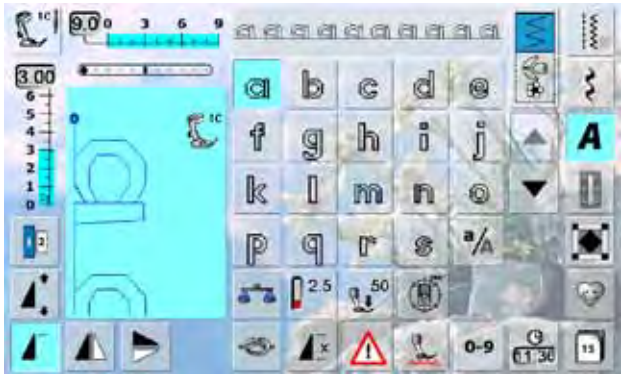

t u v w x y z ä à â
å æ ç è é ê ñ ö oe ø
ü

Script

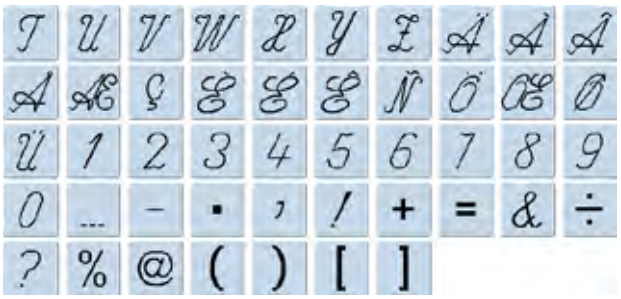

Quilting Text

Comic Sans

T U V W X Y Z Ä À Â
Å Æ Ç È É Ê Ñ Ö Œ Ø
Ü 1 2 3 4 5 6 7 8 9
0 _ - • ' ! + = & ÷
? % @ ( ) [ ]

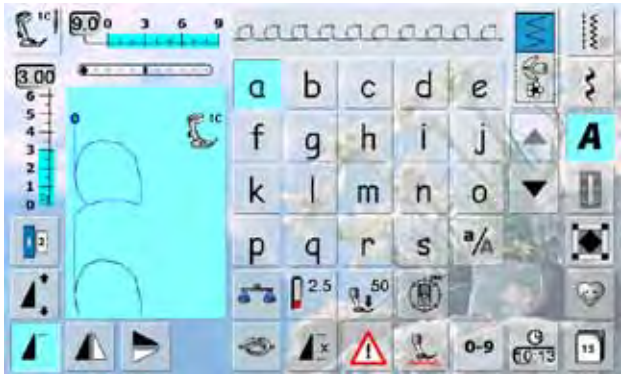

t u v w x y z ä à â
å æ ç è é ê ñ ö œ ø
ü

Monograms

Cyrillic

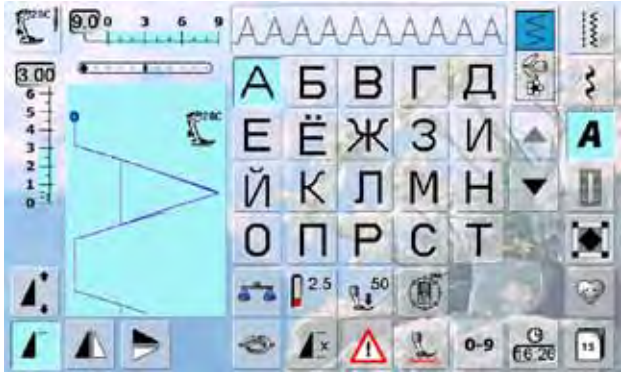

У Ф Х Ц Ч Ш Щ Ъ Ы Ь
Э Ю Я

Hiragana

なにぬねのはひふへほ
まみむめもやゆよらりる
れろわをんぁいうぇぉ
ゃゆょつがぎぐげござ
じずぜぞだぢづでどば
びぶべぼぱぴぷぺぽ
1 2 3 4 5 6 7 8 9 0
－ - 。 ? ! ・ 、「 」『
』

Katakana

ナニヌネノハヒフヘホ
マミムメモヤユヨラリル
レロワヲンァィゥエォ
ャュョッガギグゲゴザ
ジズゼソダヂヅデドバ
ビブベボパピプペポ
1 2 3 4 5 6 7 8 9 0
－ - 。 ? ! ・ 、「 」『
』

Kanji

稚園小中学校月火水木
金土

04 Bernina8

05 Dragon

06 Corner Leaf Swag

07 Tulip

08 Corner Tulip

09 Zig Zag Flower

10 Braided Swirl

11 Corner Braided Swirl

12 Loop Swag

13 Corner Loop Swag

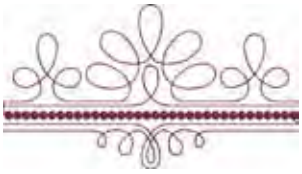

14 Curly Swag

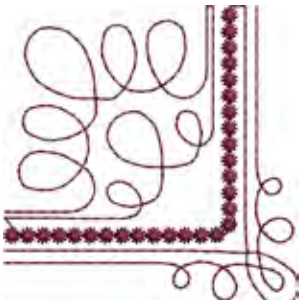

15 Corner Curly Swag

16 Flower Vase

17 Open Flowers

18 Sunflower Right

19 Sunflower Left

20 Sunflower Corner

21 Sunflower Border

22 Spring Bud

23 Spring Flower

24 Lily

25 Forget-me-not Bunch

26 Coursage

27 Lapel Corsage

28 Tiny Bloom

29 Tiny Bloom Nosegay

30 Climbing Border

31 Tiny Bloom Border

32 Interwoven Snippet

33 Circle Medallion

34 Floral Medallion

35 Interwoven Leaves

36 Interlace Border

37 Rose Outline

38 Battenburg Border

39 Doodle

Louisa Meyer

LM 01

LM 02

LM 03

LM 04

LM 05

LM 06

LM 07

LM 08

LM 09

LM 10

LM 11

LM 12

LM 13

LM 14

LM 15

LM 16

LM 17

LM 18

LM 19

LM 20

LM 21

LM 22

LM 23

LM 24

LM 25

LM 26

LM 27

LM 28

LM 29

LM 30

LM 31

LM 32

LM 33

LM 34

LM 35

LM 36

LM 37

LM 38

LM 39

LM 40

LM 41

LM 42

LM 43

LM 44

LM 45

LM 46

LM 47

LM 48

LM 49

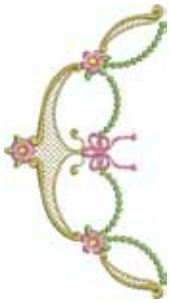

LM 50

LM 51

LM 52

LM 53

LM 54

LM 55

LM 56

LM 57

LM 58

LM 59

Susanne Müller

SM 01

SM 02

SM 03

SM 04

SM 05

SM 06

SM 07

SM 08

SM 09

SM 10

SM 11

SM 12

SM 13

SM 14

SM 15

SM 16

SM 17

SM 18

SM 19

SM 20

SM 21

SM 22

SM 23

SM 24

SM 25

SM 26

SM 27

SM 28

SM 29

SM 30

SM 31

SM 32

SM 33

Diane Gaudynski

DG 01

DG 02

DG 03

DG 04

DG 05

DG 06

DG 07

DG 08

DG 09

DG 10

DG 11

DG 12

DG 13

DG 14

DG 15

DG 16

DG 17

DG 18

DG 19

DG 20

DG 21

DG 22

Alphabets

1 King Charles

2 King Charles

3 Drifter

4 Drifter

5 Childs Play

6 Childs Play

7 Victoria

8 Victoria

9 Alice

10 Alice

11 Chicago

12 Chicago

13 Anniversary

14 Anniversary

15 Swiss Block

16 Swiss Block

17 Quilt Block

18 Old English

Index

A

Accessories
- Accessory box 8, 9
- Embroidery 124
- Sewing 6
- Software 124

Adjusting the Stitch Length/ Width 31, 57

Alphabets/Characters 32
- Changing the size of lettering 34, 67
- Combined with functions 66, 67
- Combining 66, 164
- Embroidery 136, 210
- In long-term memory 82
- Monograms 68, 199
- Selecting 56, 65, 142
- Sewing 197

Appliqué 92

Arrow Icon/Scroll Up 33, 84

Automatic Buttonhole 102-105
- Foot with slide 3A 7
- Programming 34, 73

Automatic Functions
- Cutting the threads 11, 30, 39
- Darning 97
- Needle stop 10, 30
- Pattern end 10, 30
- Raise presser foot 10, 39
- Securing 10, 38
- Securing stitch program 31, 39
- Security program 35, 63
- Selecting a hoop 146
- Sequence control 163
- Stitch width limitation 63
- Threading the needle 10, 11, 18, 19
- Threading the upper thread 18, 19, 30

Automatic Threading
- Upper thread 18

B

Backstepping 30, 35, 57, 80, 84

Balance 51
- BERNINA Dual Feed 52
- Buttonholes 71
- Decorative stitches 51
- Monograms 68

Basting 90

Battery 12, 169

BERNINA Dual Feed 119

Blind Stitch
- Practical stitch 58, 100
- Presser foot 7
- Quilting 77

Bobbin 14
- Bobbins in the accessory box 9
- Removing/inserting the bobbin 16
- Winding 15
- Bobbin-Play sewing 107
- Bobbin winding device 10

BERNINA Stitch Regulator (BSR)
- Acoustic Signal 117
- Activating/Deactivating 114, 118
- Presser foot 7, 115
- Free-Motion quilting 116
- Functions 116
- Mode 114
- Preparation 115
- Sewing 114, 118

Button Sew-on Program 69, 75, 76

Buttonhole 32, 69, 102
- 5-steps 70
- 7-steps 70
- Automatic 72, 102
- Balance 71
- Buttonhole slit 34, 70
- Buttonhole type 69
- Cutting open 105
- Entering/programming the length 72
- Important Information 102
- In Long-Term Memory 75
- Manual 70, 102
- Measuring of button size 72
- Presser feet 7
- Programming 70, 73
- Stabilizer 103

C

Carrying Handle 10

Change
- Embroidery height or width 136, 144
- Embroidery properties 152
- Embroidery settings 40
- Embroidery speed 31, 40

Embroidery stitch density 136, 153
Embroidery stitch type 136, 152
Embroidery thread colors/brand 153
Letter size in alphabets 67
Programmed buttonhole 75
Proportionally 136, 144
Sewing speed 13, 31, 38
Stitch patterns 79
Stitch width and length 57
Thread tension 23, 35, 137
Welcome screen 37

Cleaning 45, 168

Combi Mode 33, 35, 109

Combining
Alphabets 66
Correcting 85
Deleting 87
Embroidery motifs 149
Move Stitch patterns 34, 86
Practical-/Decorative stitches 64
Repeat 1-9x 34
Saving 35, 82
Saving on USB Stick 124
Securing program 31, 34
Subdivider 1 35, 86
Subdivider 2 35, 86

Connecting Stitches 35, 86, 108, 109

Contents
Embroidery 121
Sewing 3

Cover
Battery 169
Head cover 172,188

Creative Consultant 49

D

Darning 59, 96, 97

Decorative Stitch Patterns 32, 60
Summary 192

Deleting
clr 32
Combinations 83, 87
Embroidery motifs 157
Stitches 35, 66, 80
User Data 47, 158

Details
Accessories 6, 124
Embroidery module 132
Sewing computer 10

Display 32
Calibrating 41
ECO Mode 32, 53
Overview 32
Wallpaper 37
Welcome Text 37

Double and Triple Needles
For decorative sewing 63
Security program 35, 63
Threading double and triple needles 19

E

ECO 53

Embroidery 121-166
Alphabets 134
Attaching/removing the hoop 159
Begin 159, 160
Details 132
Display 134
Endless 137, 147
Fill stitch types 140
Functions 136, 137
Mode 134
Parking 137
Preparation 126-130
Presser foot 124
Properties 152
Thread breakage 137, 162
Threads 138

Embroidery Hoop
Attaching/removing 159
Display 136, 146
Hooping the fabric 128, 129
Jumbo-Hoop 125, 166
Mega-Hoop 125, 166
Moving the hoop 137
Optional Accessories 124, 125
Selection 136, 146
Size 146
Template 124, 128

Embroidery Module 132
Attaching/removing module 126

Embroidery Motif
Adding 149
Alphabets 134, 210
Basting 154
Center 145
Change motif size 144
Change stitch type 152
Combining 149
Deleting 157, 158
Grid 145
Mirror image 137, 145
Motif categories 143
Move 144
Overview Embroidery Motif 201-209
Overwriting 156
Positioning 150
Reallocating colors 153
Reducing Color Changes 154
Rotate 137, 145
Saving to USB Stick 124, 155
Saving/Memory 155
Selecting 142
Single- or Multi-colored 153, 154
Thread tension 25, 137
Zoom 136, 146

Embroidery Settings 36, 40

Embroidery Speed 40

Endless Embroidery 147, 148, 165

Error Messages 170-190

External Function Buttons 10, 30, 31

F

Fabric
- BERNINA Dual Feed 120
- Centering in hoop 128
- Fabric thickness 40
- Feed 23
- Hooping 128, 129
- Needle and thread 26, 27
- Stabilizer 129, 130

Fabric Feed 23

Feed-dog 23
- Position 34
- Raising/lowering the feed-dog 12, 33

Foot Control
- Connection 12
- Needle stop up/down 13, 30
- Start/Stop function 30

Foot Control – Additional Functions
- Needle up/down 13

Free Hand System (FHS) 12

H

Handwheel 10

Help 32, 50

Hem 99
- Blind hem 58, 77, 100

Height Compensation Tool 24

History 32, 81

Hoop (see Embroidery Hoop)

I/J

Information 36, 43

Inserting a Bobbin 16

Jumbo-Hoop 125, 166

Jump Stitches 137, 140

L

Languages 43

Leave active screen
- ESC 34

LED Sewing Light 13

Lettering Size 34, 67, 68

Long Stitch 34
- Function 62

Long Term Memory 82
- Modifications 85
- Opening 84
- Stitch combinations 82

Lubricating 168, 175

M

Main Power Switch 12

Maintenance and Troubleshooting 168-190
- Cleaning 168
- Maintenance 168, 169
- Troubleshooting 170-190

Manual Threading
- Double and triple needles 19
- Lower thread 16, 127
- Upper thread 18

Mega-Hoop 125, 166

Messages 170-190

Mirror-Image Function
- Combined with functions 62
- Left/Right 34, 137
- Mirroring of entire combinations 84, 85
- Up/Down 34, 137

Monitoring Function 42

Motif Size
- Display 146

Multi-Directional Sewing 33, 35

Multifunction Knobs 10, 31

Multifunction Tool 6, 22

N

Needle
- Altering the needle position 31, 57
- Automatic threading 10, 18, 30
- Changing the needle 22
- Double and triple needles 19
- Embroidery needles 127
- In standard accessories 6, 124
- Information 43
- Needle stop up/down 10, 30, 39
- Needle summary 28
- Needle/thread combination 26, 27

Position button 10, 31
Security program 35, 63
Up/Down with Foot control 13

Needle Clamp 10

O

Optional Accessories
Embroidering 124
Sewing 7

Overlock
Overlock foot 7
Seams 98, 100
Stitches 58, 59

Overwriting 87, 156

P

Patchwork 92
Specialty feet 7
Stitches 77
With BERNINA Dual Feed 120

Permanent Reverse Sewing 35, 80

Personal Program 32, 78-80

Pintucks 112

Power Cable 6
Connection 10, 12

Practical Stitches 32
Adjusting individual 57
Brief Description 58
In Personal Program 78
Overview 192

Preparing and Setting Up
The embroidery module 126-130
The sewing computer 12-25

Presser Foot
BERNINA specialty feet 7
BSR foot 114, 115
Changing the presser foot 22
Display 35
Position of presser foot 10, 31
Presser feet summary 7
Presser foot pressure 33, 35, 52
Raise/lower the presser foot 12, 39
Selecting 56

Pre-tension 10, 15, 19

Q

Quilting 92, 113
Free-Motion quilting 116
Labels 113
Stitches 77, 93
With BSR 114

R

Reset 36, 47

Reverse Sewing
Button 30, 57
Permanent reverse sewing 35, 80

Running Stitch 58

S

Safety Instructions 2

Satin Stitch 77, 152, 193

Saving
Function button 35
Saving embroidery motifs 155
Saving stitch pattern combinations 82
Saving to USB Stick 124
Stitch Altering Area 33, 79
The special screen 80

Seam Guide 17

Select
Alphabets 65, 142
Buttonholes 69
Embroidery hoops 146, 159
Embroidery motifs 143
Menu 36
Pesonal designs 143
Presser Foot 56
Practical stitches 58
Quilting stitches 77
Stitch patterns 32, 56

Service Data 44

Servicing 168, 169

Settings
Acoustic Signal 42, 117
Confirming 34
Customizing the screen 37
Dealer-related data 43
Embroidery 40
Language 43
Needle stop position (up/down) 30
Reset 47
Screen 36
Security Program 33
Sewing 38
System 44
Thread tension 25
Update 44

Setup Program 36-47
Basic settings (Reset) 47
Calibrating buttonhole foot no. 3A 46
Cleaning the needle threading mechanism 45
Dealer 43
Embroidery Settings 40
Information 43
Lubricating the hook 45
Monitoring Functions 42

032299.53.04_1204_B830_EN

Packing position 46
Screen Calibration 41
Screen Settings 37
Sewing settings 38
Updating 44

Sewing 3-120
Accessories 6
Balance 51, 52
Basic settings 38, 39, 47
Content 3
Error messages 170
Function buttons 30, 31, 57
Functions 34, 35
Multidirectional Sewing 33
Reverse sewing/Backstepping 30, 57, 84
Sewing corners 24
Sewing pattern combinations 64
Stitchcategory 192-200
With BSR 114
With height compensation plates 24

Sewing Computer Cover 6

Sewing Light LED 13

Sewing Speed 13, 31, 38

Sideways-Motion Foot 7

Sideways-Motion Stitches 60, 108
Balance 51
Monograms 68
Overview 192-195

Single Mode 35

Single Pattern
Altering a stitch combination 85
Deleting 83
Moving a stitch combination 86
Securing 57
Selection by number 56

Slide-on Table 17

Software Version 44

Speed Control 10, 31

Spool Disc 6

Spool Holder 14

Start-Stop Button 30
Embroidery start 159

Stitch Altering Area 33, 79

Stitch Counter Function 34, 70

Stitch Width/Length Knob 10, 31

Stitch Pattern
Buttonholes 69
Decorative stitches 60
Display 33
Functions 34, 35
Help 50
Overview 192-200
Practical stitches 58, 90
Quilt stitches 77
Skyline 111

Stitch Pattern Selection
By number 56
Selection 32

Stitch Plate
Attaching/removing 23
Cleaning 168
Optional Accessories 23, 127

Stitch Category 192-200

Straight Stitch 58, 90

Summary
Embroidery functions 136, 137
Embroidery module 132
Embroidery motifs 201-209
Screen 32
Sewing computer 10, 11
Sewing functions 34, 35
Stitch patterns 192-200

T

Tapering 61, 110, 196

Thread
Color information bar 153
General facts 26, 138
Matching fabric, thread and needle 26-28
Thread breakage 137, 162

Threading
Thread Guide 21

Thread Cutter
Automatic 30, 39
For bobbin thread 16, 127
For bobbin winder 10, 15, 17
On Head Frame 11, 17

Thread Guide 10

Thread-Guide-and-Lubricating Unit 20-21

Thread Tension 25

Time/Alarm 33, 35, 137

Touch Pen 6

Triple Needle 19, 28, 63

Triple Straight Stitch 58, 91

Troubleshooting 170-190

Tutorial 48

U

Underlay Stitch 140

Updating 36, 44

Upper Thread
- Breaks 162
- Tension 25
- Threading 18

USB
- Connecting cable 124
- USB connection 10, 12
- USB Stick 124, 136, 142

W

Walking Foot 7

Wallpaper 37

Welcome Text 37

Winder 15, 17
- Speed 15
- Switching on/off 15
- Pre-tension 10

Z

Zig-zag Stitch 58, 95
- With BSR 114, 118

Zipper
- Inserting a zipper 101
- Zipper foot 7

Zoom 136, 146

2012/04 EN 032299.53.04

032299.53.04_1204_B830_EN

In partnership with

AMANN GROUP Mettler®

made to create BERNINA